FRÄNKISCHE

Price catalogue

Drainage Systems

International 2024/2

Drainage Systems
www.fraenkische.com

Table of contents

Contact 5

Agricultural drainage 7

- FF-drän 8
- Kokofil 8
- Multifil 9
- Sleeve filter 9
- FF-drän with PY geotextile wrapping 9
- PE-drän 13
- PP-drän 13

Building drainage 17

- opti-drän - system 18
- MultiControl 22
- UniControl 23

Underground cable protection 27

- Kabuflex S 28
- Kabuflex R 29
- Kabuflex R plus 31
- Conduit and cable sealings 36
- Furowell 39

Gardening and landscaping 41

- Tree ventilation and irrigation set 42

Road and track drainage/ shaft systems 45

- AquaPipe - system 46
- AquaTraffic Control 55
- Strabusil 58
- StormPipe 63
- StrabuControl 67
- Strasil 75
- RailPipe - system 82
- RailControl 83

Stormwater management 85

- Rigofill® ST-Standard - system 86
- Rigofill® ST-Advanced - system 90
- SickuPipe 102
- MuriPipe 102

Annex 110

- Treatment systems product overview 110
- Information concerning DIN 4262-1 112
- Standards for drainage products 113
- Technical data – materials 114

Delivery service 115

Always up to date:
The Drainage Systems price catalogue as digital download

www.fraenkische.com/pricecatalogue-drainage-2024

FRÄNKISCHE

Rigofill® ST-Advanced
The stackable storage/infiltration module

Discover our high-quality Rigofill ST-A(dvanced) stackable module and our QuadroControl ST-A system shaft – the system for challenging requirements in the field of infiltration, storage and retention of stormwater.

The stackable storage/infiltration module made of basic elements to be fit together helps to save storage and transportation space and impresses with its easy construction site handling. The module is suited for installation depth of up to approx. 6 m under traffic load (HGV 60) and complies with EN 17152-1.

The entire system can be inspected thanks to its open design and inspection tunnels in the base body and shaft.

Drainage Systems
www.fraenkische.com

Contact

Contact persons Königsberg headquarters

Sales Director (Export)

Klaus Lichtscheidel+49 9525 88-8066

klaus.lichtscheidel@fraenkische.de

Regional Sales Director (Export)

Markus Blatt+49 9525 88-8609

markus.blatt@fraenkische.de

Technology

Pedro Simões+49 9525 88-8360

pedro.simoes@fraenkische.de

Back Office

Dinah Wächter+49 9525 88-8155
dinah.waechter@fraenkische.de

Julia Möller+49 9525 88-2394
julia.moeller@fraenkische.de

Viktoria Majewski+49 9525 88-2103
viktoria.majewski@fraenkische.de

Fabian Thiergärtner+49 9525 88-2197
fabian.thiergaertner@fraenkische.de

Jennifer Gernert+49 9525 88-2569
jennifer.gernert@fraenkische.de

Fax+49 9525 88-2522

Agricultural drainage

Drainage was already known to the Babylonians. Since then, the art of drainage and improving sub-surface water management has been developed continuously. A slow process, which, however, saw a revolution in the 1960s.

The 1960s mark the origin of FF-drän in Germany, an idea which revolutionised the world of drainage! The inventor of the first mechanical plough to install drainage pipes had become interested in the continuously extruded plastic conduit by FRÄNKISCHE, which was well-known even then – the birth of the yellow FF-drän pipe.
The first continuously extruded corrugated and flexible drainage pipe made of PVC-U by FRÄNKISCHE was a pioneering product which redefined the state of the art.
This was the beginning of an unprecedented success story which formed the basis for other innovations.

www.fraenkische.com/agricultural-drainage

FF-drän

Flexible PVC-U drainage pipe; colour yellow; 1.2 mm standard perforation width.

Application: in many fields of drainage, e.g., civil engineering, gardening and landscaping, cemeteries, agricultural drainage, etc.

Product	Cat. no.	Technical data			PU	Price [€/m]
FF-drän	53100050	DN 50	D_I = 44	D_O = 50	50 m coil	**1.90**
	53100065	DN 65	D_I = 59	D_O = 65	50 m coil	**2.20**
	53100080	DN 80	D_I = 72	D_O = 80	50 m coil	**2.45**
	53100100	DN 100	D_I = 92	D_O = 100	50 m coil	**3.35**
	53100125	DN 125	D_I = 116	D_O = 125	50 m coil	**6.60**
	53100160	DN 160	D_I = 146	D_O = 159	50 m coil	**8.90**
	53100200	DN 200	D_I = 183	D_O = 199	45 m coil	**17.45**
FF-drän unperforated	53120050	DN 50	D_I = 44	D_O = 50	50 m coil	**1.90**
	53120065	DN 65	D_I = 59	D_O = 65	50 m coil	**2.20**
	53120080	DN 80	D_I = 72	D_O = 80	50 m coil	**2.45**
	53120100	DN 100	D_I = 92	D_O = 100	50 m coil	**3.35**
	53120125	DN 125	D_I = 116	D_O = 125	50 m coil	**6.60**
	53120160	DN 160	D_I = 146	D_O = 159	50 m coil	**8.90**
	53120200	DN 200	D_I = 183	D_O = 199	45 m coil	**17.45**
FF-drän bulk coil	53105050	DN 50	D_I = 44	D_O = 50	200 m coil	**1.90**
	53105065	DN 65	D_I = 59	D_O = 65	150 m coil	**2.20**
	53105080	DN 80	D_I = 72	D_O = 80	100 m coil	**2.45**
	53105100	DN 100	D_I = 92	D_O = 100	100 m coil	**3.35**
FF-drän special length	53180080	DN 80	D_I = 72	D_O = 80	10 m coil	**4.30**
	53180100	DN 100	D_I = 92	D_O = 100	10 m coil	**4.80**

Kokofil

FF-drän with coir wrapping.

Application: in many fields of drainage, particularly in gardening and landscaping, agricultural drainage, etc.

Product	Cat. no.	Technical data			PU	Price [€/m]
Kokofil	53200050	DN 50	D_I = 44	D_O = 50*	50 m coil	**3.20**
	53200065	DN 65	D_I = 59	D_O = 65*	50 m coil	**4.05**
	53200080	DN 80	D_I = 72	D_O = 80*	50 m coil	**5.50**
	53200100	DN 100	D_I = 92	D_O = 100*	50 m coil	**7.15**
	53200125	DN 125	D_I = 116	D_O = 125*	50 m coil	**13.85**
	53200160	DN 160	D_I = 146	D_O = 159*	25 m coil	**19.25**
	53200200	DN 200	D_I = 183	D_O = 199*	20 m coil	**34.35**
Kokofil bulk coil	53205050	DN 50	D_I = 44	D_O = 50*	200 m coil	**3.20**
	53205065	DN 65	D_I = 59	D_O = 65*	150 m coil	**4.05**
	53205080	DN 80	D_I = 72	D_O = 80*	100 m coil	**5.50**
Kokofil special length	53208100	DN 100	D_I = 92	D_O = 100*	10 m coil	**9.70**

*without wrapping

Recommended retail price. Actual design may differ.
Actual dimensions may differ within the scope of production tolerances.

Multifil

FF-drän with PP fibre wrapping.

Application: both in agricultural drainage and in gardening and landscaping.

Product	Cat. no.	Technical data			PU	Price [€/m]
Multifil	53210050	DN 50	D_I = 44	D_O = 50*	50 m coil	**3.35**
	53210065	DN 65	D_I = 59	D_O = 65*	50 m coil	**4.50**
	53210080	DN 80	D_I = 72	D_O = 80*	50 m coil	**6.60**
	53210100	DN 100	D_I = 92	D_O = 100*	50 m coil	**8.55**
	53210125	DN 125	D_I = 116	D_O = 125*	50 m coil	**15.95**
	53210160	DN 160	D_I = 146	D_O = 159*	25 m coil	**25.70**
	53210200	DN 200	D_I = 183	D_O = 199*	20 m coil	**46.40**
Multifil bulk coil	53215050	DN 50	D_I = 44	D_O = 50*	200 m coil	**3.35**
	53215065	DN 65	D_I = 59	D_O = 65*	150 m coil	**4.50**
	53215080	DN 80	D_I = 72	D_O = 80*	100 m coil	**6.60**

*without wrapping

Sleeve filter

FF-drän with cover sleeve.

Application: both in agricultural drainage and in gardening and landscaping.

Product	Cat. no.	Technical data			PU	Price [€/m]
Sleeve filter	53232050	DN 50	D_I = 44	D_O = 50*	50 m coil	**4.50**
	53232065	DN 65	D_I = 59	D_O = 65*	50 m coil	**5.00**
	53232080	DN 80	D_I = 72	D_O = 80*	50 m coil	**7.30**
	53232100	DN 100	D_I = 92	D_O = 100*	50 m coil	**9.60**
	53232125	DN 125	D_I = 116	D_O = 125*	50 m coil	**16.55**
	53232160	DN 160	D_I = 146	D_O = 159*	25 m coil	**26.45**
	53232200	DN 200	D_I = 183	D_O = 199*	20 m coil	**53.00**

*without wrapping

FF-drän with PY geotextile wrapping

Application: both in agricultural drainage and in gardening and landscaping.

Product	Cat. no.	Technical data			PU	Price [€/m]
FF-drän with PY geotextile wrapping	53230050	DN 50	D_I = 44	D_O = 50*	50 m coil	**3.55**
	53230065	DN 65	D_I = 59	D_O = 65*	50 m coil	**4.65**
	53230080	DN 80	D_I = 72	D_O = 80*	50 m coil	**7.00**
	53230100	DN 100	D_I = 92	D_O = 100*	50 m coil	**8.95**
	53230125	DN 125	D_I = 116	D_O = 125*	50 m coil	**16.20**
	53230160	DN 160	D_I = 146	D_O = 159*	25 m coil	**26.15**
	53230200	DN 200	D_I = 183	D_O = 199*	20 m coil	**49.70**
FF-drän with PY geotextile wrapping bulk coil	53235050	DN 50	D_I = 44	D_O = 50*	200 m coil	**3.55**
	53235065	DN 65	D_I = 59	D_O = 65*	150 m coil	**4.65**
	53235080	DN 80	D_I = 72	D_O = 80*	100 m coil	**7.00**

*without wrapping

Recommended retail price. Actual design may differ.
Actual dimensions may differ within the scope of production tolerances.

Drainage pipe accessories

Made of PVC-U, PE, and PP. Suitable for FF-drän, Kokofil, Multifil, sleeve filter, FF-drän with PY geotextile wrapping and opti-drän. For pull-out resistant joints.

Other fittings available on request.

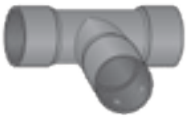

Product	Cat. no.	Technical data	PU	DG	Price [€/pc.]
Coupling	53610050	DN 50	1 pc(s).	EX04	**2.30**
	53610065	DN 65	1 pc(s).		**2.90**
	53610080	DN 80	1 pc(s).		**5.00**
	53610100	DN 100	1 pc(s).		**7.15**
	53610125	DN 125	1 pc(s).		**9.35**
	53610160	DN 160	1 pc(s).		**10.20**
	53610200	DN 200	1 pc(s).		**28.90**
End plug	53680050	DN 50	100 pc(s).	EX04	**1.70**
	53680065	DN 65	50 pc(s).		**2.25**
	53680080	DN 80	25 pc(s).		**3.60**
	53680100	DN 100	20 pc(s).		**4.60**
	53680125	DN 125	10 pc(s).		**5.60**
	53680160	DN 160	1 pc(s).		**11.80**
	53680200	DN 200	1 pc(s).		**30.60**
90° elbow	53620080	DN 80	10 pc(s).	EX04	**12.80**
	53620100	DN 100	25 pc(s).		**16.70**
	53620125	DN 125	4 pc(s).		**22.80**
	53620160	DN 160	1 pc(s).		**32.40**
	53620200	DN 200	1 pc(s).		**46.40**
Tee	53630050	DN 50	20 pc(s).	EX04	**15.65**
	53630065	DN 65	20 pc(s).		**17.95**
	53630080	DN 80	15 pc(s).		**24.05**
	53630100	DN 100	25 pc(s).		**28.90**
	53630125	DN 125	4 pc(s).		**38.65**
	53630160	DN 160	1 pc(s).		**50.35**
	53630200	DN 200	1 pc(s).		**69.25**
Tee with reducer	53631065	DN 65/50	1 pc(s).	EX04	**25.65**
	53631080	DN 80/65	1 pc(s).		**36.25**
	53632080	DN 80/50	1 pc(s).		**31.85**
	53631100	DN 100/80	1 pc(s).		**44.75**
	53632100	DN 100/65	1 pc(s).		**42.20**
	53631125	DN 125/100	1 pc(s).		**57.25**
	53632125	DN 125/80	1 pc(s).		**54.90**
	53633125	DN 125/65	1 pc(s).		**52.50**
	53631160	DN 160/125	1 pc(s).		**83.65**
	53632160	DN 160/100	1 pc(s).		**77.55**
	53633160	DN 160/80	1 pc(s).		**72.90**

Recommended retail price. Actual design may differ.
Actual dimensions may differ within the scope of production tolerances.

Drainage pipe accessories

Made of PVC-U, PE, and PP. Suitable for FF-drän, Kokofil, Multifil, sleeve filter, FF-drän with PY geotextile wrapping and opti-drän. For pull-out resistant joints.

Other fittings available on request.

Product	Cat. no.	Technical data	PU	DG	Price [€/pc.]
45° wye	53640050	DN 50	20 pc(s).	EX04	**18.05**
	53640065	DN 65	10 pc(s).		**21.10**
	53640080	DN 80	10 pc(s).		**27.85**
	53640100	DN 100	25 pc(s).		**32.25**
45° wye	53640125	DN 125	1 pc(s).	EX04	**45.60**
	53640160	DN 160	1 pc(s).		**59.65**
	53640200	DN 200	1 pc(s).		**82.75**
KG adapter with KG coupling	53660100	DN 100 KG spigot (can be inserted)	20 pc(s).	EX04	**16.90**
KG adapter with KG spigot	53661101	DN 100 Push-fit KG coupling	20 pc(s).	EX04	**16.90**
Strasil adapter with Strasil coupling	53661100	DN 100 Strasil spigot can be inserted	1 pc(s).	EX04	**26.50**
Strabusil adapter with Strabusil coupling	53662100	DN 100 Strabusil spigot can be inserted	1 pc(s).	EX04	**26.50**
	53662150	DN 160/150 Strabusil spigot can be inserted	1 pc(s).		**31.50**
Ventilation	53690100	DN 100; with interlocking mechanism; for irrigating wastewater released from small-scale wastewater treat-ment plants acc. to DIN 4261	1 pc(s).	EX04	**59.00**
Reducer	53611065	DN 65/50	20 pc(s).	EX04	**5.70**
	53612080	DN 80/50	1 pc(s).		**20.50**
	53611080	DN 80/65	20 pc(s).		**7.45**
	53613100	DN 100/50	1 pc(s).		**28.80**
	53612100	DN 100/65	1 pc(s).		**23.75**
	53611100	DN 100/80	20 pc(s).		**10.00**
	53613125	DN 125/65	1 pc(s).		**32.95**
	53612125	DN 125/80	1 pc(s).		**31.45**
	53611125	DN 125/100	10 pc(s).		**12.70**
	53613160	DN 160/80	1 pc(s).		**50.30**
	53612160	DN 160/100	1 pc(s).		**46.00**
	53611160	DN 160/125	10 pc(s).		**15.95**
	53613200	DN 200/100	1 pc(s).		**83.00**
	53612200	DN 200/125	1 pc(s).		**85.60**
	53611200	DN 200/160	1 pc(s).		**49.30**

Recommended retail price. Actual design may differ.
Actual dimensions may differ within the scope of production tolerances.

Drainage pipe accessories

Made of PVC-U, PE, and PP. Suitable for FF-drän, Kokofil, Multifil, sleeve filter, FF-drän with PY geotextile wrapping and opti-drän. For pull-out resistant joints.

Other fittings available on request.

Product	Cat. no.	Technical data	PU	DG	Price [€/pc.]
Saddle inlet piece	53685050	DN 50-90°	105 pc(s).	EX04	**6.40**
	53685065	DN 65-90°	70 pc(s).		**9.70**
	53686050	DN 50-45°	105 pc(s).		**6.40**
	53686065	DN 65-45°	80 pc(s).		**9.70**
Saddle	53674080	DN 80	140 pc(s).	EX04	**8.30**
	53674100	DN 100	120 pc(s).		**9.70**
	53674125	DN 125	60 pc(s).		**12.20**
	53674160	DN 160/200	40 pc(s).		**17.70**
Connection and joint piece L [1]	53665065	DN 65/50	25 pc(s).	EX04	**20.50**
	53666080	DN 80–100/50	25 pc(s).		**16.90**
	53665080	DN 80–100/65	25 pc(s).		**16.35**
	53667125	DN 100-125/50	10 pc(s).		**23.35**
	53666125	DN 100-125/65	10 pc(s).		**25.40**
	53665100	DN 100-125/80	10 pc(s).		**27.50**
	53668160	DN 125-160/50	1 pc(s).		**31.50**
	53667160	DN 125-160/65	1 pc(s).		**32.13**
	53666160	DN 125-160/80	1 pc(s).		**33.60**
	53665125	DN 125-160/100	10 pc(s).		**34.65**
	53665160	DN 160-200/125	1 pc(s).		**40.65**
Outlet with flap valve [2]	53679050	DN 50; 1 m length	25 pc(s).	EX04	**35.40**
	53679065	DN 65; 1 m length	10 pc(s).		**47.20**
	53679080	DN 80; 1 m length	10 pc(s).		**57.90**
	53679100	DN 100; 1 m length	5 pc(s).		**75.80**
	53679125	DN 125; 1 m length	5 pc(s).		**90.85**
	53679160	DN 160; 1 m length	5 pc(s).		**116.45**
	53679200	DN 200; 1 m length	3 pc(s).		**200.55**

[1] Connection and joint piece L with extended cuff to directly laterally connect suction units of smaller nominal diameters.
[2] Outlets for KG 250, 300 and 400 available on request.

PE-drän

Totally perforated corrugated PE pipe; colour black with yellow coloured stripe; ring stiffness class SN 8; total perforation area larger than or equal to 50 cm²/m; 1.2 mm perforation width.
Complies with DIN 1187 and DIN 4262-1.

Application: in many drainage applications, e.g., civil engineering, gardening, landscaping and sports field construction, cemeteries, agricultural drainage, surface drainage, deep drainage, etc.

NB

Not suited for building drainage according to DIN 4095.

Product	Cat. no.	Technical data			PU	Price [€/m]
PE-drän with metre marking	53103065	DN 65	D_I = 55	D_O = 65	50 m coil	**2.80**
	53103080	DN 80	D_I = 68	D_O = 80	50 m coil	**3.25**
	53103100	DN 100	D_I = 85	D_O = 100	50 m coil	**3.80**
PE-drän bulk coil	53108065	DN 65	D_I = 55	D_O = 65	150 m coil	**2.80**
	53108080	DN 80	D_I = 68	D_O = 80	100 m coil	**3.25**
	53108100	DN 100	D_I = 85	D_O = 100	100 m coil	**3.80**
PE-drän unperforated	53123080	DN 80	D_I = 68	D_O = 80	50 m coil	**3.25**
	53123100	DN 100	D_I = 85	D_O = 100	50 m coil	**3.80**

PP-drän

Unperforated corrugated PP drainage pipe; colour blue; ring stiffness larger than or equal to 10 kN/m² ("SN 10"); in conformity with DIN 1187 and DIN 4262-1.

Application: as so-called "dummy pipe" for groundwater lowering, connects directly to pumps (vacuum extraction for deep drainage).

Product	Cat. no.	Technical data			PU	Price [€/m]
PP-drän	53123081	DN 80	D_I = 66	D_O = 79	50 m coil	**5.40**
	53123101	DN 100	D_I = 82	D_O = 100	50 m coil	**7.40**

Recommended retail price. Actual design may differ.
Actual dimensions may differ within the scope of production tolerances.

PE-drän and PP-drän accessories

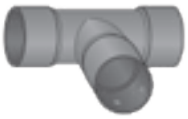

Product	Cat. no.	Technical data	PU	DG	Price [€/pc.]
Coupling	53710065	DN 65	1 pc(s).	EX04	**3.80**
	53710080	DN 80	1 pc(s).		**4.85**
	53710100	DN 100	1 pc(s).		**7.00**
Reducer	53711100	DN 100/80	1 pc(s).	EX04	**9.10**
Tee	53730080	DN 80	1 pc(s).	EX04	**23.00**
	53730100	DN 100	1 pc(s).		**27.60**
45° wye	53740080	DN 80	1 pc(s).	EX04	**26.60**
	53740100	DN 100	1 pc(s).		**30.90**
Tee with reducer	53731100	DN 100/80	1 pc(s).	EX04	**40.40**

Recommended retail price. Actual design may differ.
Actual dimensions may differ within the scope of production tolerances.

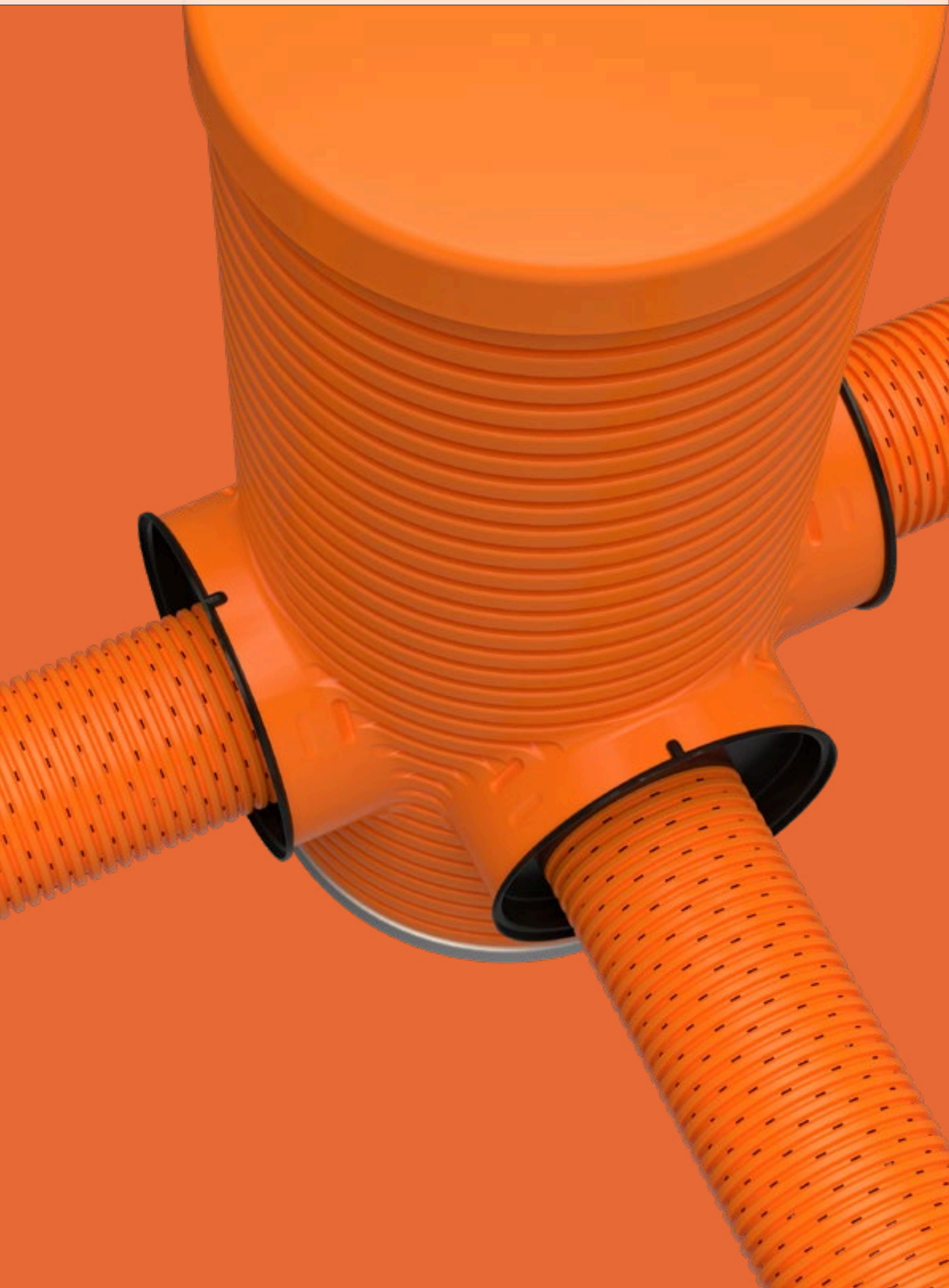

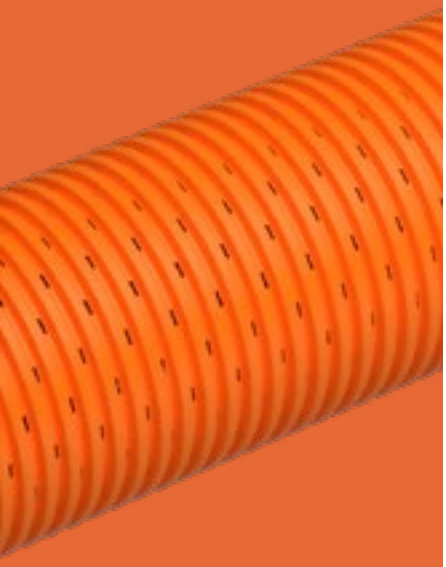

Building drainage

Building drainage keeps the area under buildings dry. It preserves the value of the building fabric and provides a healthy living environment.

Sub-surface drainage is used to remove underground water, most of the time by using perforated or slit pipes. Building drainage generally refers to all necessary means for drainage that are used to protect buildings against damage from humidity or moisture from the surrounding soil.

Building drainage is of major economic importance! Proper drainage could help to prevent 90 per cent of all basement defects. It therefore significantly helps to preserve the value of a building.

www.fraenkische.com/building-drainage

opti-drän system

The FRÄNKISCHE opti-drän system ensures permanent and reliable building drainage according to DIN 4095. Perfectly matching components offer the perfect solution for each installation.

3 components for professional building drainage according to DIN 4095:

- opti-drän straight length drainage pipe
- opti-control flushing, inspection and collection shaft
- opti-flor geotextile

opti-drän® pipe

DIN 4095

DIN 1187

Straight length PVC-U drainage pipe according to DIN 4095; 80 cm²/m minimum perforation area; flexible and quality-monitored; colour orange; 2.50 m individual length with one coupling.

Application: opti-drän system component; all fields of building drainage.
0.5 % minimum slope.

Product	Cat. no.	Technical data	PU	DG	Price [€/m]
opti-drän perforated	50100100	DN 100; 2.5 m length	330 m/pal.	EX06	**3.95**
	50100125	DN 125; 2.5 m length	202.5 m/pal.		**6.75**
	50100160	DN 160; 2.5 m length	115 m/pal.		**11.05**
	50100200	DN 200; 2.5 m length	75 m/pal.		**17.15**
opti-drän unperforated	50110100	DN 100; 2.5 m length	330 m/pal.	EX06	**3.95**
	50110125	DN 125; 2.5 m length	202.5 m/pal.		**6.75**
	50110160	DN 160; 2.5 m length	115 m/pal.		**11.05**
	50110200	DN 200; 2.5 m length	75 m/pal.		**17.15**

Please refer to pages 10–12 for accessories.

Recommended retail price. Actual design may differ.
Actual dimensions may differ within the scope of production tolerances.

opti-control®

DIN 4095

Certified jetting resistance

Proof of CCTV inspection

PVC-U flushing, inspection and collection shaft for professional drainage systems according to DIN 4095, available with or without sand trap, D_O 315, 80 cm total height, colour orange, with 3 cuffs DN 200 and 3 end plugs, with lockable and hard-wearing PP shaft cover, the shaft bottom can be filled to increase stability and prevent the structure from shifting upwards.

Application: opti-drän system component for flushing and inspecting building drainage systems. According to DIN 4095, an inspection shaft is required to change the direction of a drainage pipe.

Product	Cat. no.	Technical data	PU	DG	Price [€/pc.]
opti-control without sand trap[1)]	50201315	D_O 315; D_I = 285; without sand trap; 80 cm total height; 65 cm effective height	12 pc(s)./ pal.	EX06	**190.50**
opti-control with sand trap[1)]	50200315	D_O 315; D_I = 285; with sand trap; 80 cm total height; 35 cm effective height	12 pc(s)./ pal.	EX06	**190.50**
opti-control drop shaft	5023031599	D_O 315; D_I = 285; with coupling; 80 cm total height; 80 cm effective height	1 pc(s).	EX06	**190.50**

[1)] Additional custom designs with 4 cuffs DN 200 available on request.

Stability

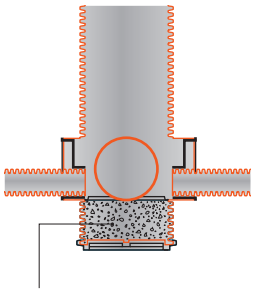

Filled with sand, gravel or concrete to increase stability and prevent the structure from shifting upwards.

opti-control without sand trap

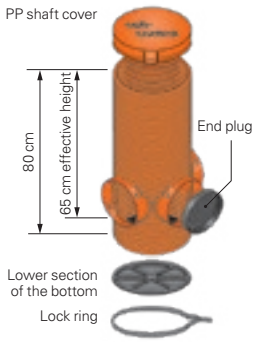

opti-control with sand trap

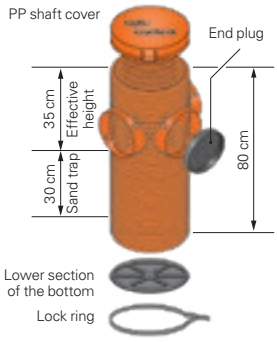

opti-control drop shaft

as extension of opti-control with or without sand trap

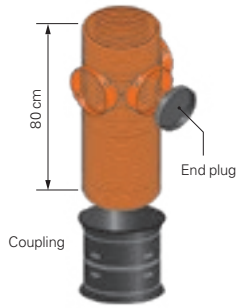

Recommended retail price. Actual design may differ.
Actual dimensions may differ within the scope of production tolerances.

opti-control® D_0 315 accessories

Extension pipe

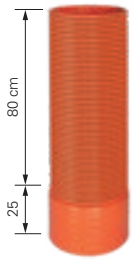

Coupling

End plug

Reducer

PP shaft cover

Aluminium shaft cover

Class B cast iron shaft cover

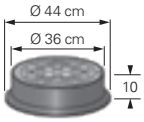

Class D cast iron shaft cover

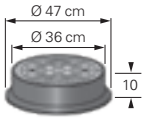

More covers available on request.

Product	Cat. no.	Technical data	PU	DG	Price [€/pc.]
Extension pipe	50240315	D_O = 315; PVC-U; 105 cm total height; 80 cm effective height	2 pc(s). 16 pc(s)./ pal.	EX06	**59.50**
Coupling	50710315	D_O = 323; D_I 315; 33 cm total height; PVC-U; for remaining pieces of extension pipe	1 pc(s).	EX06	**25.00**
End plug	50780200	DN 200	1 pc(s).	EX06	**8.15**
Reducer	50713200	DN 200 / DN 100 Drän	1 pc(s).	EX06	**14.50**
	50714230	DN 200 / DN 100 KG	1 pc(s).		**14.50**
	50712200	DN 200 / DN 125 Drän / KG	1 pc(s).		**14.50**
	50711200	DN 200 / DN 160 Drän / KG 150	1 pc(s).		**14.50**
	50714200	DN 200 / Strasil DN 100	1 pc(s).		**14.50**
	50714201	DN 200 / Strasil DN 150	1 pc(s).		**14.50**
	50714210	DN 200 / Strabusil DN 100	1 pc(s).		**14.50**
	50714211	DN 200 / Strabusil DN 150	1 pc(s).		**14.50**
	50711180	DN 100 / DN 80 Drän	1 pc(s).		**6.90**
Adapter	50760200	Strasil DN 200	1 pc(s).	EX06	**36.85**
	50761200	Strabusil DN 200	1 pc(s).		**36.85**
Shaft cover (PP)	50780316	With interlocking mechanism	1 pc(s).	EX06	**39.00**
Shaft cover (aluminium)	50782315	With interlocking mechanism	1 pc(s).	EX06	**119.70**
	50781315	Without interlocking mechanism	1 pc(s).		**89.30**
Shaft cover [1] (cast iron)	50784000	Class B 125; without ventilation	1 pc(s). 25 pc(s)./ pal.	EX06	**189.95**
	50784400	Class D 400; without ventilation; with screw connection	1 pc(s). 25 pc(s)./ pal.		**281.10**

[1] V2A screws

Recommended retail price. Actual design may differ.
Actual dimensions may differ within the scope of production tolerances.

opti-control® D_0 315 accessories

Concrete shaft cover

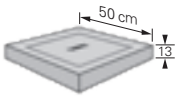

Square class B cast iron shaft cover

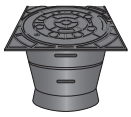

Steel shaft cover

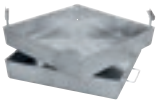

More covers available on request.

Product	Cat. no.	Technical data	PU	DG	Price [€/pc.]
Shaft cover (concrete)	50783000	50 x 50 x 13 cm	1 pc(s).	EX06	**182.35**
Square (cast iron) shaft cover, class B 125, 35 x 35 cm	50783500	Including adapter, set	1 pc(s).	EX06	**189.95**
Square shaft cover (galvanised) steel, class B 125, 50 x 50 cm	50783005	Two-piece, square cover, consisting of frame and trough; can be paved or filled/covered individually; 48 x 48 cm inside dimensions; 95 mm total height; 87 mm trough depth; with drain holes in the trough, two lifting openings with end plugs, incl. two lifting keys	1 pc(s).	EX06	**520.00**

[1] V2A screws

opti-flor®

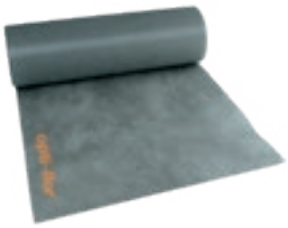

CE 0799-CPD-55

Mechanically bonded and thermally treated fabric with specifically adapted characteristics to produce a filter-stable drainage system according to DIN 4095; geotextile class 2; bulk pallets available on request.

Application: reliably separates the native soil or backfill from the vertical permeable layer and the gravel backfill and prevents silting.

Product	Cat. no.	Technical data	PU	DG	Price [€/m²]
opti-flor	50570062	62.5 cm width; 50 m length; 125 g/m² weight	31.25 m² 718.75 m²/pal.	EX06	**4.45**
	50570125	125 cm width; 50 m length; 125 g/m² weight	62.50 m² 937.50 m²/pal.		**4.25**
	50570250	250 cm width; 50 m length; 125 g/m² weight	125 m² 1.875 m²/pal.		**4.45**

Recommended retail price. Actual design may differ.
Actual dimensions may differ within the scope of production tolerances.

MultiControl®

DIN EN 13598-2

Certified jetting resistance

Proof of CCTV inspection

Certified leak testing

PP building connection shaft according to DIN EN 13598-2; D_O 400 outside diameter; yellow inside. 3 inlets KG coupling DN 150 with factory-mounted sealing rings and sealed with PP end plugs. Outlet KG spigot DN 150.

Application: flushing and inspection shaft for wastewater and stormwater sewers in residential and industrial buildings, for car parks and stockyards, or in landscaping.

Product	Cat. no.	Technical data	PU	DG	Price [€/pc.]
MultiControl	50200400	80 cm shaft height	8 pc(s)./pal.	EX22	**135.00**
	50201400	150 cm shaft height	4 pc(s)./pal.		**163.00**

MultiControl incl. extension pipe

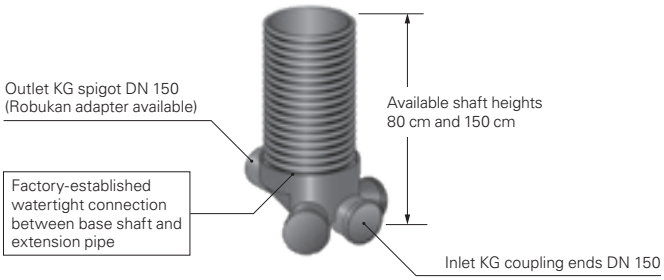

MultiControl® accessories

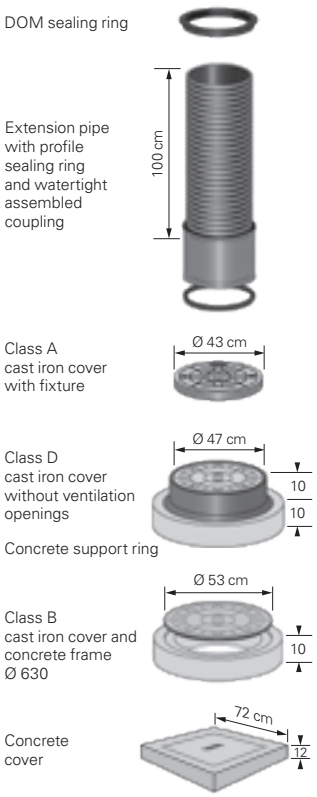

Product	Cat. no.	Technical data	PU	DG	Price [€/pc.]
Extension pipe	5024040099	PP; D_O = 400; 100 cm length; yellow inside; with watertight assembled coupling and 1 separate sealing ring	1 pc(s).	EX22	**86.00**
Coupling	50710400	D_O 400; for remaining pieces of extension pipe	1 pc(s).	EX22	**32.00**
Profile sealing ring[1]	50719400	D_O 400; for extension pipe	1 pc(s).	EX22	**12.60**
DOM sealing ring	50719403	For extension pipe D_O 400; as seal between concrete support ring and extension pipe	1 pc(s).	EX22	**26.25**
Shaft cover (cast iron)	50785100	Cast iron; class A 15; with fixture [2]; without ventilation openings	1 pc(s).	EX22	**66.70**
	50785005	Cast iron; class B 125 [2] [3]; without ventilation openings; with concrete frame (set)	1 pc(s).		**143.70**
	50785400	Cast iron; class D 400; cast iron cover [2], cast iron frame, concrete support ring; without ventilation openings; with screwless interlocking mechanism	1 pc(s).		**257.80**
Shaft cover (concrete)	50783400	Concrete 72 x 72 x 12 cm Concrete frame with concrete cover	1 pc(s).	EX22	**190.40**

[1] For lubricant for watertight coupling joints, see page 62.
[2] V2A screws
[3] More covers available on request.

Recommended retail price. Actual design may differ.
Actual dimensions may differ within the scope of production tolerances.

UniControl

Easy to handle, universal PE-HD shaft system, DN 300; colour blue.
With 3 inlets DN 200 and sand trap; 1 end plug DN 200 and accessible cover with interlocking mechanism included.

Application: universal shaft technology for civil engineering applications. Not watertight!

Product	Cat. no.	Technical data	PU	DG	Price [€/pc.]
UniControl	55500300	DN 300 with sand trap; D_O = 347; D_I = 300; 80 cm total height, 70 cm effective height	12 pc(s)./pal.	EX06	**142.00**

UniControl with sand trap

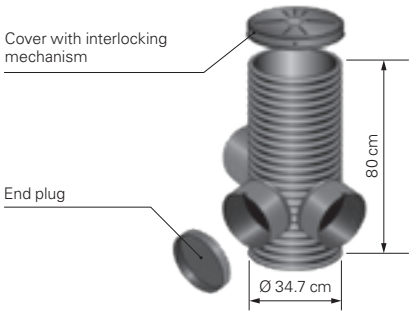

UniControl accessories

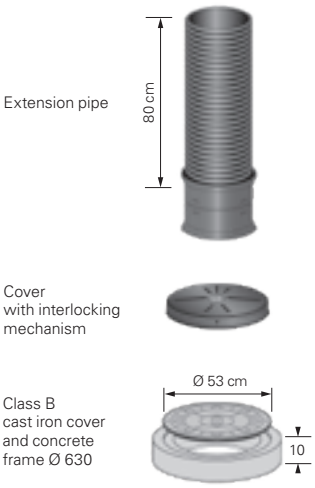

Product	Cat. no.	Technical data	PU	DG	Price [€/pc.]
Extension pipe	55540300	DN 300; with coupling; 80 cm length	1 pc(s).	EX06	**43.00**
Coupling	55510300	DN 300; for remaining pieces of extension pipe	1 pc(s).	EX06	**33.60**
Shaft cover [1]	55580300	With interlocking mechanism	1 pc(s).	EX06	**27.30**
	55585005	Cast iron; class B 125; with concrete frame (set)	1 pc(s).		**143.70**
End plug	50780200	DN 200	1 pc(s).	EX06	**8.15**
Reducer	50713200	DN 200/DN 100 Drän	1 pc(s).	EX06	**14.50**
	50714230	DN 200/DN 100 KG	1 pc(s).		**14.50**
	50712200	DN 200/DN 125 Drän/KG	1 pc(s).		**14.50**
	50711200	DN 200/DN 160 Drän/KG 150	1 pc(s).		**14.50**
	50714200	200 / Strasil DN 100	1 pc(s).		**14.50**
	50714201	200 / Strasil DN 150	1 pc(s).		**14.50**
	50714210	200 / Strabusil DN 100	1 pc(s).		**14.50**
	50714211	200 / Strabusil DN 150	1 pc(s).		**14.50**
Adapter	50760200	Strasil DN 200	1 pc(s).	EX06	**36.85**
	50761200	Strabusil DN 200	1 pc(s).		**36.85**

[1] V2A screws

Additional fittings and covers to accommodate higher loads available on request.

Recommended retail price. Actual design may differ.
Actual dimensions may differ within the scope of production tolerances.

UniControl 400

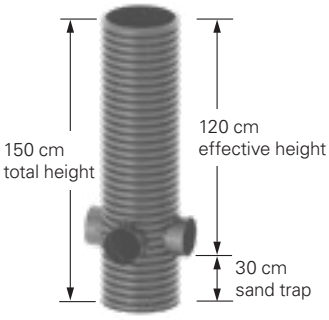

Easy to handle, universal PE-HD shaft system, DO 400; with sand trap; colour black. UV-resistant; with 2 connections DN 200 as 180° shaft or with 3 connections as 90° wye shaft; universal connection options DN 100-DN 200 using reducers and adapters (see accessories).

Application: universal flushing, inspection and collection shaft with sand trap for civil engineering applications. Not watertight!

Product	Cat. no.	Technical data	PU	DG	Price [€/pc.]
UniControl 400	55503402	2/200 180° shaft D_O 400 with sand trap; 1 inlet / 1 outlet DN 200 D_O = 400 mm; D_I = 350 mm; 150 cm total height; 120 cm effective height; 30 cm sand trap	1 pc(s).	EX06	**175.00**
	55503403	3/200 90° wye shaft D_O 400 with sand trap; 2 inlets / 1 outlet DN 200 D_O = 400 mm; D_I = 350 mm; 150 cm total height; 120 cm effective height; 30 cm sand trap	1 pc(s).		**185.00**

Recommended retail price. Actual design may differ.
Actual dimensions may differ within the scope of production tolerances.

UniControl 400 accessories

Extension pipe

Coupling

Profile sealing ring

Connection set DN 150

DOM sealing ring

Product	Cat. no.	Technical data	PU	DG	Price [€/pc.]
Extension pipe	55540400	D_O = 400; 3 m total height	1 pc(s).	EX06	**103.00**
	55540406	D_O = 400; 6 m total height	1 pc(s).		**169.00**
Coupling	55510400	D_O = 400; for extension pipe	1 pc(s).	EX06	**31.50**
Profile sealing ring	55519400	For extension pipe D_O 400	1 pc(s).	EX06	**12.60**
Connection set DN 150 drainage pipe to extension pipe	55573400	For retrofit (on-site) connections of drainage pipes DN 150 to the extension pipe; required drilling Ø 186 mm	1 pc(s).	EX06	**35.70**
DOM sealing ring	55519403	For extension pipe D_O = 400; as seal between concrete support ring and extension pipe	1 pc(s).	EX06	**26.25**
End plug	50780200	DN 200	1 pc(s).	EX06	**8.15**
Reducer	50713200	DN 200 / DN 100 Drän	1 pc(s).	EX06	**14.50**
	50714230	DN 200 / DN 100 KG	1 pc(s).		**14.50**
	50712200	DN 200 / DN 125 Drän / KG	1 pc(s).		**14.50**
	50711200	DN 200 / DN 160 Drän / KG 150	1 pc(s).		**14.50**
	50714200	200 / Strasil DN 100	1 pc(s).		**14.50**
	50714201	200 / Strasil DN 150	1 pc(s).		**14.50**
	50714210	200 / Strabusil DN 100	1 pc(s).		**14.50**
	50714211	200 / Strabusil DN 150	1 pc(s).		**14.50**
Adapter	50760200	Strasil DN 200	1 pc(s).	EX06	**36.85**
	50761200	Strabusil DN 200	1 pc(s).		**36.85**

NB

For covers, please refer to StrabuControl accessories on page 69 – 70.

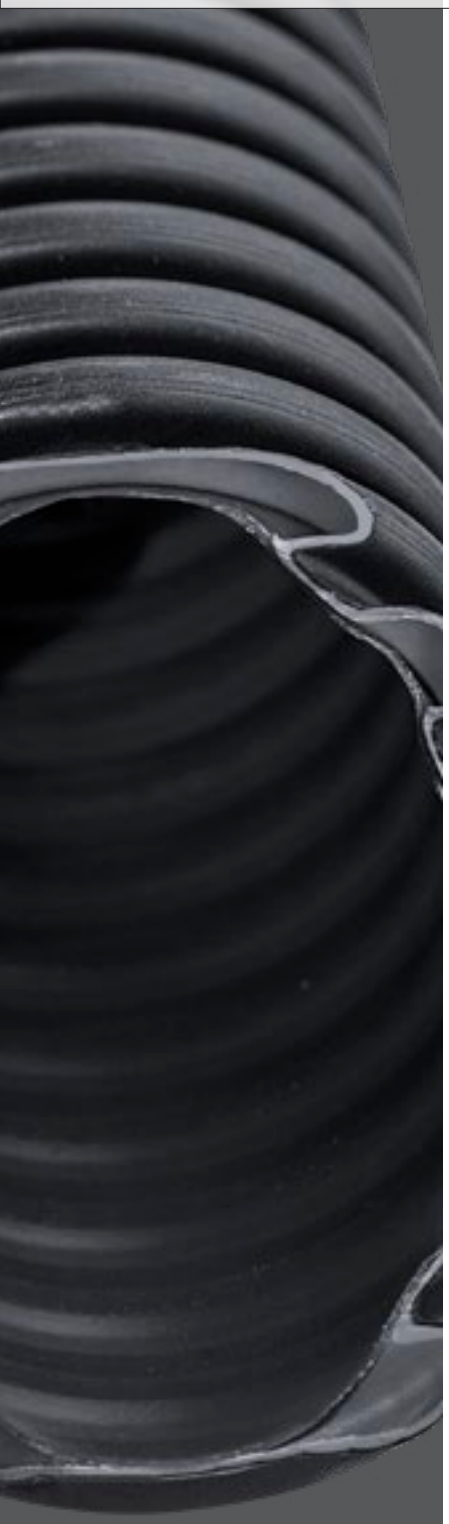

Underground cable protection

Wires and cables are important to a working infrastructure. They provide us with energy and data and keep daily life running. While wires and cables were predominantly installed aboveground in the past, underground installation quickly became a standard in industrial countries in the course of mechanisation – not only for optical reasons but also due to the continuously increasing demand for interconnection capacity and a growing number of wires and cables.

Underground installation itself and the fact that various media must often be accommodated in small spaces in urban areas pose potential risks. Cables must be protected during and after installation making the use of cable conduits essential. They provide mechanical protection to underground cables and allow for assigning different media to different conduits. At the same time, they serve as unused conduits to retrofit additional cables.

www.fraenkische.com/cable-protection

Kabuflex® S

PE cable conduit in structured-wall design (corrugated outside, smooth inside) according to DIN EN 61386-24 with coupling (sandtight), halogen-free, colour black. High compressive strength and impact resistance as well as pliability. Compressive stress type 450, classification code N450. Couplings for sandtight connections (SD). Profile sealing rings for watertight connections (WD).

Application: cable conduit or unused conduit for underground installations.

Product	Cat. no.	Technical data			PU	Price [€/m]
Kabuflex S 6 m length coupling included	5610007599	DN 75	D_I = 62	D_O = 76	1.260 m/pal.	**2.65**
	5610011099	DN 110	D_I = 93	D_O = 111	600 m/pal.	**3.95**
	5610012099	DN 120	D_I = 99	D_O = 118	540 m/pal.	**5.70**
	5610012599	DN 125	D_I = 107	D_O = 126	462 m/pal.	**5.70**
	5610014599	DN 145	D_I = 125	D_O = 146	360 m/pal.	**8.80**
	5610016099	DN 160	D_I = 138	D_O = 161	276 m/pal.	**7.40**
	5610017599	DN 175	D_I = 148	D_O = 174	252 m/pal.	**10.25**
Kabuflex S 6 m length assembled coupling included	56110110	DN 110	D_I = 93	D_O = 111	600 m/pal.	**3.95**

Kabuflex® S / special colours

PE cable conduit in structured-wall design (corrugated outside, smooth inside) according to DIN EN 61386-24 with coupling (sandtight design), halogen-free, special colours.
High compressive strength and impact resistance as well as pliability. Compressive stress type 450, classification code N450. Couplings for sandtight connections (SD).
With profile sealing rings for watertight connections (WD).

Application: cable conduit or unused conduit for underground installations.

Product	Cat. no.	Technical data			PU	Price [€/m]
Kabuflex S 6 m length with coupling red outside	56120075	DN 75	D_I = 62	D_O = 76	1.260 m/pal.	**2.65**
	56120110	DN 110	D_I = 93	D_O = 111	600 m/pal.	**3.95**
	56120125	DN 125	D_I = 107	D_O = 126	462 m/pal.	**5.70**
	56120145	DN 145	D_I = 125	D_O = 146	360 m/pal.	**8.80**
	56120160	DN 160	D_I = 138	D_O = 161	276 m/pal.	**10.25**
Kabuflex S 6 m length with coupling green outside	56130110	DN 110	D_I = 93	D_O = 111	600 m/pal.	**4.75**
Kabuflex S 6 m length with assembled coupling blue outside	56140110	DN 110	D_I = 93	D_O = 111	420 m/pal.	**4.75**

Recommended retail price. Actual design may differ.
Actual dimensions may differ within the scope of production tolerances.

Kabuflex® R

PE cable conduit in structured-wall design (corrugated outside, smooth inside) according to DIN EN 61386-24 with coupling (sandtight), halogen-free, colour black. Flexible, in coils, with feed cord. High compressive strength and impact resistance as well as pliability. Compressive stress type 450, classification code N450. Couplings for sandtight connections (SD). Profile sealing rings for watertight connections (WD).

Application: cable conduit or unused conduit for underground installations.

Product	Cat. no.	Technical data			PU	Price [€/m]
Kabuflex R	56210040	DN 40	D_I = 32	D_O = 40	50 m coil	**1.60**
	56210050	DN 50	D_I = 40	D_O = 50	50 m coil	**1.80**
	56210063	DN 63	D_I = 52	D_O = 64	50 m coil	**1.95**
	56210075	DN 75	D_I = 62	D_O = 76	50 m coil	**2.45**
	56210090	DN 90	D_I = 75	D_O = 91	50 m coil	**3.15**
	56210110	DN 110	D_I = 93	D_O = 111	50 m coil	**3.45**
	56200120	DN 120	D_I = 99	D_O = 118	25 m coil	**5.65**
	56200125	DN 125	D_I = 107	D_O = 126	25 m coil	**5.65**
	56200160	DN 160	D_I = 138	D_O = 161	25 m coil	**7.25**
	56200200	DN 200	D_I = 172	D_O = 201	25 m coil	**9.50**
Kabuflex R	56210125	DN 125	D_I = 107	D_O = 126	50 m coil	**5.65**
	56210160	DN 160	D_I = 138	D_O = 161	50 m coil	**7.25**

Recommended retail price. Actual design may differ.
Actual dimensions may differ within the scope of production tolerances.

Kabuflex® R / special colours

PE cable conduit in structured-wall design (corrugated outside, smooth inside).
DIN EN 61386-24 with coupling (sandtight design), halogen-free, special colours.
Flexible, in coils, with feed cord. High compressive strength and impact resistance as well as pliability. Compressive stress type 450, classification code N450. Couplings for sandtight connections (SD). With profile sealing rings for watertight connections (WD).

Application: cable conduit or unused conduit for underground installations.

Product	Cat. no.	Technical data			PU	Price [€/m]
Kabuflex R red outside, black inside	56220050	DN 50	D_I = 40	D_O = 50	50 m coil	**1.80**
	56220063	DN 63	D_I = 52	D_O = 64	50 m coil	**1.95**
	56220075	DN 75	D_I = 62	D_O = 76	50 m coil	**2.45**
	56220090	DN 90	D_I = 75	D_O = 91	50 m coil	**3.15**
	56220110	DN 110	D_I = 93	D_O = 111	50 m coil	**3.45**
	56220125	DN 125	D_I = 107	D_O = 126	25 m coil	**5.65**
	56220160	DN 160	D_I = 138	D_O = 161	25 m coil	**7.25**
Kabuflex R green outside, black inside	56237040 [1]	DN 40	D_I = 32	D_O = 40	50 m coil	**1.90**
	56230110	DN 110	D_I = 93	D_O = 111	50 m coil	**4.60**
Kabuflex R blue outside, black inside	56240050 [1]	DN 50	D_I = 40	D_O = 50	50 m coil	**2.20**
	56240063 [1]	DN 63	D_I = 52	D_O = 64	50 m coil	**2.45**
	56240075	DN 75	D_I = 62	D_O = 76	50 m coil	**3.05**
	56240090	DN 90	D_I = 75	D_O = 91	50 m coil	**4.05**
	56240110	DN 110	D_I = 93	D_O = 111	50 m coil	**4.60**
Kabuflex R yellow outside, black inside	56250075	DN 75	D_I = 62	D_O = 76	50 m coil	**3.05**
	56250090	DN 90	D_I = 75	D_O = 91	50 m coil	**4.05**
	56250110	DN 110	D_I = 93	D_O = 111	50 m coil	**4.60**

[1] No stock items; delivery times on request.

Kabuflex® R – UV

UV-resistant for 10 years

Kabuflex R – UV, UV-resistant for up to 10 years.
Technical data correspond to Kabuflex R.

Product	Cat. no.	Technical data			PU	Price [€/m]
Kabuflex R – UV	56209111	DN 110	D_I =93	D_O = 111	50 m coil	**13.65**

Recommended retail price. Actual design may differ.
Actual dimensions may differ within the scope of production tolerances.

Kabuflex® R plus 450 co2ntrol

VDE certification

PE cable conduit in structured-wall design (corrugated outside, smooth inside) according to DIN EN 61386-24 with transparent coupling (sandtight), halogen-free, outside colour black, inside colour green. High compressive strength and impact resistance as well as pliability. Compressive stress type 450, classification code N450. Transparent couplings for sandtight connections (SD). With profile sealing rings for watertight connections (WD).

Application: cable conduit featuring enhanced stability achieved by the use of superior quality material.

Product	Cat. no.	Technical data			PU	Price [€/m]
Kabuflex R plus 450 co2ntrol	56271040	DN 40	D_I = 31	D_O = 40	50 m coil	**3.00**
	56271050	DN 50	D_I = 40	D_O = 50	50 m coil	**3.60**
	56271063	DN 63	D_I = 52	D_O = 63	50 m coil	**3.95**
	56271075	DN 75	D_I = 62	D_O = 75	50 m coil	**4.80**
	56271090	DN 90	D_I = 75	D_O = 90	50 m coil	**4.95**
	56271110	DN 110	D_I = 93	D_O = 110	50 m coil	**6.00**
	56270125	DN 125	D_I = 106	D_O = 125	25 m coil	**8.30**
	56270160	DN 160	D_I = 137	D_O = 160	25 m coil	**12.35**
	56270200	DN 200	D_I = 173	D_O = 200	25 m coil	**32.40**

Kabuflex® R plus 750 co2ntrol

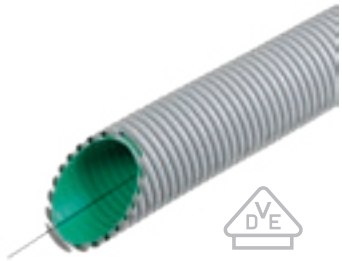

VDE certification

PE cable conduit in structured-wall design (corrugated outside, smooth inside) according to DIN EN 61386-24 with transparent coupling (sandtight), halogen-free, outside colour grey, inside colour green. High compressive strength and impact resistance as well as pliability. Compressive stress type 750, classification code N750. Transparent couplings for sandtight connections (SD). With profile sealing rings for watertight connections (WD).

Application: for high-stress compressive environments, when installed in or through concrete, and for building lead-throughs according to VDE-AR-N 4100, TAR low voltage.

Product	Cat. no.	Technical data			PU	Price [€/m]
Kabuflex R plus 750 co2ntrol	56276075	DN 75	D_I = 62	D_O = 75	50 m coil	**9.10**
	56276090	DN 90	D_I = 75	D_O = 90	50 m coil	**12.50**
	56276110	DN 110	D_I = 93	D_O = 110	50 m coil	**13.00**
	56275125	DN 125	D_I = 106	D_O = 125	25 m coil	**17.85**
	56275160	DN 160	D_I = 136	D_O = 160	25 m coil	**29.10**

Please generally observe this when installing Kabuflex conduits!

Please observe our installation manual for underground installations!
In addition, DIN EN 1610, ZTV A-StB 97 by the FGSV and the installation manuals A515/A535 by the KRV apply.

Recommended retail price. Actual design may differ.
Actual dimensions may differ within the scope of production tolerances.

Kabuflex® S and Kabuflex® R accessories

For cable conduits, coiled or in straight lengths.

Product	Cat. no.	Technical data	PU	DG	Price [€/pc.]
SD coupling	56610040	DN 40	1 pc(s).	EX10	**2.10**
	56610050	DN 50	1 pc(s).		**2.20**
	56610063	DN 63	1 pc(s).		**2.30**
	56610075	DN 75	1 pc(s).		**3.30**
	56610090	DN 90	1 pc(s).		**3.60**
	56610110	DN 110	1 pc(s).		**3.80**
	56610120	DN 120	1 pc(s).		**5.35**
	56610125	DN 125	1 pc(s).		**5.60**
	56610145	DN 145	1 pc(s).		**7.25**
	56610160	DN 160	1 pc(s).		**7.80**
	56610175	DN 175	1 pc(s).		**9.45**
SD coupling	56611200	DN 200	1 pc(s).	EX10	**9.95**
WD coupling 2 sealing rings included	5661120199	DN 200	1 pc(s).	EX10	**15.05**

Coupling for Kabuflex R plus (transparent)	56615040	DN 40	1 pc(s).	EX10	**3.40**
	56615050	DN 50	1 pc(s).		**3.70**
	56615063	DN 63	1 pc(s).		**4.05**
	56615075	DN 75	1 pc(s).		**4.20**
	56615090	DN 90	1 pc(s).		**4.80**
	56615110	DN 110	1 pc(s).		**6.20**
	56615125	DN 125	1 pc(s).		**8.55**
	56615160	DN 160	1 pc(s).		**13.15**
	56215200	DN 200	1 pc(s).		**15.30**

90° SD bend, with coupling	5662007599	DN 75	1 pc(s).	EX10	**37.05**
	5662011099	DN 110	1 pc(s).		**47.95**
	5662012099	DN 120	1 pc(s).		**49.40**
	5662012599	DN 125	1 pc(s).		**56.80**
	5662014599	DN 145	1 pc(s).		**69.15**
	5662016099	DN 160	1 pc(s).		**71.60**
	5662017599	DN 175	1 pc(s).		**83.95**

45° SD bend, with coupling	5662107599	DN 75	1 pc(s).	EX10	**34.55**
	5662111099	DN 110	1 pc(s).		**41.95**
	5662112099	DN 120	1 pc(s).		**49.40**
	5662112599	DN 125	1 pc(s).		**54.30**
	5662114599	DN 145	1 pc(s).		**56.80**
	5662116099	DN 160	1 pc(s).		**59.25**
	5662117599	DN 175	1 pc(s).		**66.70**
Flexible SD bend, with assembled coupling	56628110	DN 110	1 pc(s).	EX10	**21.00**

Recommended retail price. Actual design may differ.
Actual dimensions may differ within the scope of production tolerances.

Kabuflex® S and Kabuflex® R accessories

For cable conduits, coiled or in straight lengths.

Product	Cat. no.	Technical data	PU	DG	Price [€/pc.]
Profile sealing ring [1]	56619040	DN 40	1 pc(s).	EX10	**1.50**
	56619050	DN 50	1 pc(s).		**1.65**
	56619063	DN 63	1 pc(s).		**1.70**
	56619075	DN 75	1 pc(s).		**1.75**
	56619090	DN 90	1 pc(s).		**2.20**
	56619110	DN 110	1 pc(s).		**2.30**
	56619120	DN 120	1 pc(s).		**4.20**
	56619125	DN 125	1 pc(s).		**4.25**
	56619145	DN 145	1 pc(s).		**4.30**
	56619160	DN 160	1 pc(s).		**4.40**
	56619175	DN 175	1 pc(s).		**4.60**
	56619200	DN 200	1 pc(s).		**8.20**
SD end plug	56680040	DN 40	1 pc(s).	EX10	**2.30**
	56680050	DN 50	1 pc(s).		**2.65**
	56680063	DN 63	1 pc(s).		**2.85**
	56680075	DN 75	1 pc(s).		**3.20**
	56680090	DN 90	1 pc(s).		**3.90**
	56680110	DN 110	1 pc(s).		**4.40**
	56680120	DN 120	1 pc(s).		**4.90**
	56680125	DN 125	1 pc(s).		**5.90**
	56680145	DN 145	1 pc(s).		**6.70**
	56680160	DN 160	1 pc(s).		**7.50**
	56680175	DN 175	1 pc(s).		**7.90**
SD end cap	56680200	DN 200	1 pc(s).	EX10	**10.65**
WD end cap sealing ring included [2]	5668109099	DN 90	1 pc(s).	EX10	**31.00**
	5668111099	DN 110	1 pc(s).		**37.10**
	5668112099	DN 120	1 pc(s).		**45.50**
	5668112599	DN 125	1 pc(s).		**48.40**
	5668116099	DN 160	1 pc(s).		**56.40**
	5668117599	DN 175	1 pc(s).		**61.20**
Kabuflex adapter	56663110	DN 110/KG 100 spigot (push-fit KG coupling)	1 pc(s).	EX10	**25.00**
Kabuflex adapter	56663160	DN 160/KG 150 spigot (push-fit KG coupling)	1 pc(s).	EX10	**50.00**

[1] For lubricant for watertight coupling joints, see page 62.
[2] Other nominal diameters available on request.

Kabuflex® S and Kabuflex® R accessories

For cable conduits, coiled or in straight lengths.

Product	Cat. no.	Technical data	PU	DG	Price [€/pc.]
Spacer, 2-fold	56691075	DN 75	1 pc(s).	EX10	**5.65**
	56691090	DN 90	1 pc(s).		**5.70**
	56691110	DN 110	1 pc(s).		**5.85**
	56691120	DN 120	1 pc(s).		**11.25**
	56691125	DN 125	1 pc(s).		**11.25**
	56691160	DN 160	1 pc(s).		**15.25**
	56691200	DN 200	1 pc(s).		**23.50**

Spacer, 4-fold	56692075	DN 75	1 pc(s).	EX10	**6.25**
	56692090	DN 90	1 pc(s).		**6.40**
	56692110	DN 110	1 pc(s).		**6.50**
	56692120	DN 120	1 pc(s).		**12.50**
	56692125	DN 125	1 pc(s).		**12.50**
	56692160	DN 160	1 pc(s).		**16.95**
	56692200	DN 200	1 pc(s).		**38.30**

Spacer, 6-fold	56693050	DN 50	1 pc(s).	EX10	**6.50**
	56693075	DN 75	1 pc(s).		**6.60**
	56693090	DN 90	1 pc(s).		**6.70**
	56693110	DN 110	1 pc(s).		**6.80**
	56693120	DN 120	1 pc(s).		**13.15**
	56693125	DN 125	1 pc(s).		**13.15**
	56693160	DN 160	1 pc(s).		**17.85**
	56693200	DN 200	1 pc(s).		**52.00**

Spacer, 8-fold	56694050	DN 50	1 pc(s).	EX10	**6.80**
	56694075	DN 75	1 pc(s).		**6.90**
	56694090	DN 90	1 pc(s).		**7.05**
	56694110	DN 110	1 pc(s).		**7.15**
	56694120	DN 120	1 pc(s).		**13.85**
	56694125	DN 125	1 pc(s).		**13.85**
	56694160	DN 160	1 pc(s).		**18.80**
	56694200	DN 200	1 pc(s).		**54.75**

Recommended retail price. Actual design may differ.
Actual dimensions may differ within the scope of production tolerances.

Building lead-throughs

Kabu-FESH Set Elektro B, the FRÄNKISCHE building lead-through system for the Electrical Systems division is a one-use building lead-through set for buildings without basement for installation in the foundation slab. The set consists of a high-quality Kabuflex R plus 750 co2ntrol cable conduit, a wall collar set, two sandtight SD end caps, and the leak-tested Kabu-IN DD internal seal for the reliable lead-through of power or telecommunication cables.

This building lead-through is embedded in the foundation slab. The advantages of the system are the easy installation of the cable conduit up to the utilities room, easy cutting of the conduit at the required height of the floor structure, and the individual adjustment to different cable diameters on site thanks to the segment ring technology of the Kabu-IN DD sealing.

Kabu®-FESH Set Elektro B

- Building lead-through for embedding in the foundation slab
- For power and telecommunication cables
- Set includes: Kabuflex R plus 750 co2ntrol, Kabu-IN DD, wall collar set and two SD end caps
- Tightness tested according to DVGW VP 601
- Waterproof concrete wear class 1 + 2, W1-E according to DIN 18533
- Complies with TAB 2019
- Radon-tight

Product	Cat. no.	Technical data	PU	Price [€/pc.]
Kabu-FESH Set Elektro B	56696075	DN 75; 6 m coil content; cable Ø [mm] 1x7-24; tightness [bar] 1.5	1 pc(s).	**633.00**
	56697075	DN 75; 10 m coil content; cable Ø [mm] 1x7-24; tightness [bar] 1.5	1 pc(s).	**822.00**
	56696110	DN 110; 6 m coil content; cable Ø [mm] 1x7-48; tightness [bar] 1.0	1 pc(s).	**703.00**
	56697110	DN 110; 10 m coil content; cable Ø [mm] 1x7-48; tightness [bar] 1.0	1 pc(s).	**905.00**

Recommended retail price. Actual design may differ.
Actual dimensions may differ within the scope of production tolerances.

Conduit and cable sealings

For the gas-tight and water pressure-tight building lead-through of power and communication cables.

Foundation slab lead-through with wall collar, Kabu-IN DD and Kabuflex R plus 750 co2ntrol

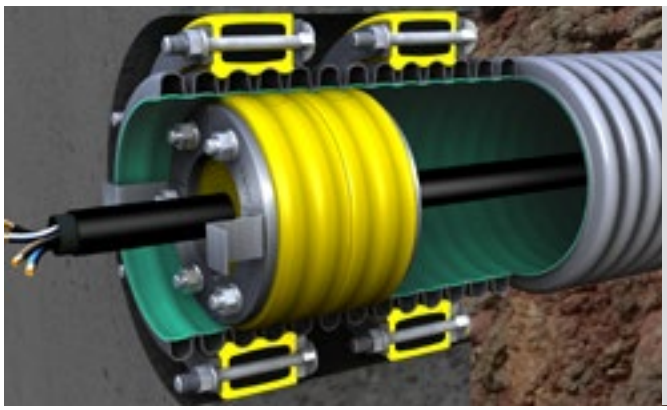

Wall lead-through with Kabu-Seal, Kabu-IN DD and Kabuflex R plus 750 co2ntrol

Kabu®-Seal

- Conduit sealings for Kabuflex R plus
- For core drill holes and casings
- Gas-tight and water pressure-tight up to 1.5 bar
- Material: EPDM/PUR – V2A compressive flange
- Visual inspection of the tightening torque
- Radon-tight

Product	Cat. no.	Technical data	PU	DG	Price [€/pc.]
Kabu-Seal – sealing package for building lead-through [1]	56688063	DN 63; Ø 100 mm core drill hole required	1 pc(s).	EX10	**350.65**
	56688075	DN 75; Ø 125 mm core drill hole required	1 pc(s).		**414.80**
	56688090	DN 90; Ø 125 mm core drill hole required	1 pc(s).		**423.00**
	56688110	DN 110; Ø 150 mm core drill hole required	1 pc(s).		**483.95**
	56688125	DN 125; Ø 200 mm core drill hole required	1 pc(s).		**634.00**
	56688160	DN 160; Ø 200 mm core drill hole required	1 pc(s).		**703.70**
	56688200	DN 200; Ø 300 mm core drill hole required	1 pc(s).		**1,009.00**

[1] Each set includes an installation manual.

Kabu®-IN

- Cable sealing for Kabuflex R plus
- Internal conduit sealing
- Two-piece
- Gas-tight and water pressure-tight up to 0.5 bar
- Material: PUR/EPDM – V2A compressive flanges
- Visual inspection of the tightening torque
- Segmented cable sealing inserts
- Radon-tight

Product	Cat. no.	Technical data	PU	DG	Price [€/pc.]
Kabu-IN 1 cable	56682063	DN 63; D_O 50; D_I 7-18; 64 height; 30 sealing width;	1 pc(s).	EX10	**248.00**
	56682075	DN 75; D_O 61; D_I 7-24; 64 height; 30 sealing width;	1 pc(s).		**275.00**
	56682090	DN 90; D_O 74; D_I 7-36; 64 height; 30 sealing width;	1 pc(s).		**318.00**
	56682110	DN 110; D_O 92; D_I 7-48; 64 height; 30 sealing width;	1 pc(s).		**395.00**
Kabu-IN 2 cables	56682111	DN 110; D_O 92; D_I 1x 7-18, 1x 7-36; 64 height; 30 sealing width;	1 pc(s).	EX10	**448.00**
Kabu-IN 3 cables	56682161	DN 160; D_O 135; D_I 3x 7-42; 64 height; 30 sealing width;	1 pc(s).	EX10	**767.00**
Kabu-IN 4 cables	56682112	DN 110; D_O 92; D_I 4x 7-18; 64 height; 30 sealing width;	1 pc(s).	EX10	**647.00**
	56682163	DN 160; D_O 135; D_I 4x 7-36; 64 height; 30 sealing width;	1 pc(s).		**808.00**
Kabu-IN 6 cables	56682164	DN 160; D_O 135; D_I 6x 7-30; 64 height; 30 sealing width;	1 pc(s).	EX10	**933.00**

Kabu®-IN DD

- Cable sealing for Kabuflex R plus
- Internal conduit sealing
- Two-piece
- Gas-tight and water pressure-tight up to 1.5 bar with Kabuflex R plus 750 co2ntrol
- Material: PUR/EPDM – V2A compressive flanges
- Visual inspection of the tightening torque
- Segmented cable sealing inserts
- Radon-tight

Product	Cat. no.	Technical data	PU	DG	Price [€/pc.]
Kabu-IN DD 1 cable	56683075	DN 75; D_O 61; D_I 7-24; 94 height; 60 sealing width;	1 pc(s).	EX10	**321.00**
	56683090	DN 90; D_O 74; D_I 7-36; 94 height; 60 sealing width;	1 pc(s).		**392.00**
	56683110	DN 110; D_O 92; D_I 7-48; 94 height; 60 sealing width;	1 pc(s).		**462.00**
Kabu-IN DD 4 cables	56683112	DN 110; D_O 92; D_I 4x 7-18; 94 height; 60 sealing width;	1 pc(s).	EX10	**924.00**

Recommended retail price. Actual design may differ.
Actual dimensions may differ within the scope of production tolerances.

Kabu®-BV

- Blind plug for Kabuflex R plus
- Gas-tight and water pressure-tight up to 0,5 bar
- Installation without tools
- Material: PUR/EPDM – V2A compressive flanges
- Visual inspection of the tightening torque
- Radon-tight

Product	Cat. no.	Technical data	PU	DG	Price [€/pc.]
Kabu-BV	56686063	DN 63; D_O = 50; 64 height; 60 sealing width;	1 pc(s).	EX10	**161.00**
	56686075	DN 75; D_O = 61; 64 height; 60 sealing width;	1 pc(s).		**195.00**
	56686090	DN 90; D_O = 74; 74 height; 60 sealing width;	1 pc(s).		**217.00**
	56686110	DN 110; D_O = 92; 74 height; 60 sealing width;	1 pc(s).		**250.00**
	56686160	DN 160; D_O = 135; 81 height; 60 sealing width;	1 pc(s).		**395.00**

Wall collar set

- Conduit sealings for Kabuflex R plus 750 co2ntrol
- For embedding in concrete
- Gas-tight and water pressure-tight up to 3 bar
- Material: EPDM
- Incl. tightening strap and tightening locks
- Radon-tight

Product	Cat. no.	Technical data	PU	DG	Price [€/pc.]
Wall collar set	56689040	DN 40	1 set	EX10	**126.00**
	56689050	DN 50	1 set		**127.00**
	56689063	DN 63	1 set		**131.00**
	56689075	DN 75	1 set		**132.00**
	56689090	DN 90	1 set		**148.00**
	56689110	DN 110	1 set		**158.00**
	56689120	DN 120	1 set		**159.00**
	56689125	DN 125	1 set		**161.00**
	56689160	DN 160	1 set		**172.00**
	56689175	DN 175	1 set		**191.00**

Furowell

Structured-wall (corrugated outside, smooth inside) PE-HD pole foundation conduit; colour black; high stability; low weight; high temperature resistance.
Easy installation also during winter months.

Application: installation of all types of poles, masts and rods, e.g., for lamp posts, traffic signs, flag poles, mile markers, etc.

Product	Cat. no.	Technical data		PU	DG	Price [€/pc.]
Furowell	56530250	DN 250; 0.8 m length	D_i = 255	22 pc(s)./pal.	EX12	**14.00**
	56531250	DN 250; 1.0 m length		22 pc(s)./pal.		**17.50**
	56532250	DN 250; 1.5 m length		11 pc(s)./pal.		**27.50**
	56540250	DN 250; 6.0 m length		14 pc(s)./pal.		**77.50**
	56531300	DN 300; 1.0 m length	D_i = 302	12 pc(s)./pal.		**18.50**
	56540300	DN 300; 6.0 m length		9 pc(s)./pal.		**109.20**
	56530350	DN 350; 0.8 m length	D_i = 350	12 pc(s)./pal.		**26.00**
	56531350	DN 350; 1.0 m length		12 pc(s)./pal.		**32.50**
	56532350	DN 350; 1.5 m length		6 pc(s)./pal.		**45.00**
	56540350	DN 350; 6.0 m length		8 pc(s)./pal.		**142.50**
	56540400	DN 400; 6.0 m length	D_i = 404	5 pc(s)./pal.		**191.70**

Protective plug	56580250	DN 250	1 pc(s).	EX12	**8.20**
	56580400	DN 400	1 pc(s).		**20.70**
Protective cover, sandtight	56580300	DN 300	1 pc(s).	EX12	**8.50**
	56580350	DN 350	1 pc(s).		**10.50**

NB

Furowell – easy to handle: Use a commercially available hole saw DN 68 to cut clean, accurate holes for Kabuflex DN 63.

Recommended retail price. Actual design may differ.
Actual dimensions may differ within the scope of production tolerances.

Gardening and landscaping

If parks do not turn into swamps after heavy rainfall events, if young trees do not die of thirst although there is little unpaved surface, and if green spaces in urban areas remain green even during persistent heat waves, then this is not a coincidence. Even if you do not see it: Products and systems are used here which work invisibly underground and make sure that the ideas and works of creators in the fields of gardening and landscaping survive as intended.

www.fraenkische.com/landscaping

Tree ventilation and irrigation set

- 5 m corrugated PVC-U ventilation and irrigation pipe; colour green; with increased air/water perforation area greater than 80 cm^2/m
- 1 tee
- 1 Walu end cap
- 2 Walu anchors

Application: constant ventilation and irrigation (with or without fertiliser) of trees.

Product	Cat. no.	Technical data	PU	DG	Price [€/pc.]
Tree preservation set	59200080	DN 80	1 set	EX16	**51.40**

Tree ventilation and irrigation pipe

Corrugated PVC-U pipe; colour green. With increased air/water perforation area greater than 80 cm^2/m.

Application: constant ventilation and irrigation (with or without fertiliser) of trees.

Product	Cat. no.	Technical data	PU	DG	Price [€/m]
Tree preservation pipe	59303080	DN 80	30 m coil	EX16	**1.80**

Recommended retail price. Actual design may differ.
Actual dimensions may differ within the scope of production tolerances.

Walu end cap

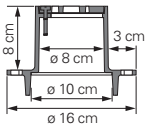

Product	Cat. no.	Technical data	PU	DG	Price [€/pc.]
Walu end cap	59710000	Cast aluminium cover element	12 pc(s)./box	EX16	**23.10**

If a complete box is ordered, 24 Walu anchors are included per box.

Walu anchor

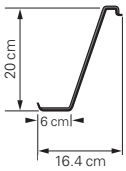

Product	Cat. no.	Technical data	PU	DG	Price [€/pc.]
Walu anchor	59712000	Provides stability during installation, and protection from theft and vandalism	4 pc(s). = 1 set	EX16	**0.75**

Concrete cover plate for Walu end cap

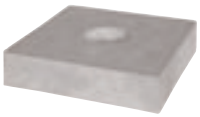

Product	Cat. no.	Technical data	PU	DG	Price [€/pc.]
Concrete cover plate for Walu end cap	59700000	Dimensions: 25 x 25 x 7.5 cm	1 pc(s).	EX16	**18.50**

Road and track drainage/shaft systems

Roads and tracks connect people and keep life running. In addition to supply/disposal and communication facilities, roads and tracks are the third pillar in our technical infrastructure.

Drainage systems help collect and discharge surface water (danger due to aquaplaning, ice), water from the soil or road superstructure (danger due to frost damage) and water coming from outside. Drainage and transport pipes are used to collect, channel or discharge the different types and amounts of water.

www.fraenkische.com/road-drainage

AquaPipe® – transport pipe SN 8 (PE-HD)

SLW/HGV 60

Structured-wall PE-HD transport pipe (corrugated outside, smooth inside), including sealing ring and coupling. Black outside, blue inside.
High load-bearing capacity (SN 8 according to DIN EN ISO 9969). Can be used acc. to REwS (Directives relating to road drainage).

Application: transport pipe to discharge polluted surface water from roads and highways and municipal surface water from residential, commercial and industrial areas, and to discharge stormwater into receiving waters.

Installation instructions

See our installation manual for the installation of AquaPipe!

Product	Cat. no.	Technical data			PU	Price [€/m]
AquaPipe 6 m length	55150100	DN/ID 100	D_I = 103.5	D_O = 118	648 m/pal.	**5.10**
	55150150	DN/ID 150	D_I = 149	D_O = 173	288 m/pal.	**7.55**
	55150200	DN/ID 200	D_I = 203	D_O = 236	162 m/pal.	**12.20**
	55150250	DN/ID 250	D_I = 255	D_O = 295	108 m/pal.	**17.85**
	55150300	DN/ID 300	D_I = 300	D_O = 349	72 m/pal.	**23.25**
	55150350	DN/ID 350	D_I = 347	D_O = 399	48 m/pal.	**31.90**
	55150400	DN/ID 400	D_I = 399	D_O = 461	30 m/pal.	**39.95**
	55150500	DN/ID 500	D_I = 499	D_O = 570	24 m/pal.	**69.40**
	55150600	DN/ID 600	D_I = 596	D_O = 684	18 m/pal.	**88.20**
	55150800	DN/ID 800	D_I = 796	D_O = 930	12 m/pal.	**165.10**
AquaPipe 3 m length [1]	55152150	DN/ID 150	D_I = 149	D_O = 173	144 m/pal.	**9.05**
	55152200	DN/ID 200	D_I = 203	D_O = 236	81 m/pal.	**14.70**
	55152250	DN/ID 250	D_I = 255	D_O = 295	54 m/pal.	**21.30**
	55152300	DN/ID 300	D_I = 300	D_O = 349	36 m/pal.	**27.60**
	55152350	DN/ID 350	D_I = 347	D_O = 399	24 m/pal.	**39.20**
	55152400	DN/ID 400	D_I = 399	D_O = 461	15 m/pal.	**46.00**
	55152500	DN/ID 500	D_I = 499	D_O = 570	12 m/pal.	**78.25**
	55152600	DN/ID 600	D_I = 596	D_O = 684	9 m/pal.	**105.65**

[1] No stock items; delivery times on request.

AquaPipe® accessories

Product	Cat. no.	Technical data	PU	PU	Price [€/pc.]
Coupling with centred limit stop 2 sealing rings included	55810150	DN 150	1 pc(s).	EX34	**12.00**
	55810200	DN 200	1 pc(s).		**23.10**
	55810250	DN 250	1 pc(s).		**27.80**
	55810300	DN 300	1 pc(s).		**35.10**
	55810350	DN 350	1 pc(s).		**36.40**
	55810400	DN 400	1 pc(s).		**53.90**
	55810500	DN 500	1 pc(s).		**86.80**
	55810600	DN 600	1 pc(s).		**169.85**
	55618800	DN 800	1 pc(s).		**277.10**

Recommended retail price. Actual design may differ.
Actual dimensions may differ within the scope of production tolerances.

AquaPipe® accessories

Product	Cat. no.	Technical data	PU	DG	Price [€/pc.]
Slide-on coupling without limit stop 2 sealing rings included	55896150	DN 150	1 pc(s).	EX34	**12.00**
	55896200	DN 200	1 pc(s).		**23.10**
	55896250	DN 250	1 pc(s).		**27.80**
	55896300	DN 300	1 pc(s).		**35.10**
	55896350	DN 350	1 pc(s).		**36.40**
	55896400	DN 400	1 pc(s).		**53.90**
	55896500	DN 500	1 pc(s).		**86.80**
	55896600	DN 600	1 pc(s).		**169.85**
	55896800	DN 800	1 pc(s).		**277.10**
Profile sealing ring [1] made of EPDM acc. to DIN EN 681	55819150	DN 150	1 pc(s).	EX34	**2.10**
	55819200	DN 200	1 pc(s).		**3.70**
	55819250	DN 250	1 pc(s).		**5.00**
	55819300	DN 300	1 pc(s).		**6.10**
	55819350	DN 350	1 pc(s).		**10.05**
	55819400	DN 400	1 pc(s).		**13.80**
	55819500	DN 500	1 pc(s).		**23.15**
	55819600	DN 600	1 pc(s).		**36.40**
	55819800	DN 800	1 pc(s).		**60.65**
GRP shaft lining	55888150	DN 150	1 pc(s).	EX34	**22.95**
	55888200	DN 200	1 pc(s).		**27.10**
	55888250	DN 250	1 pc(s).		**31.25**
	55888300	DN 300	1 pc(s).		**42.40**
	55888350	DN 350	1 pc(s).		**47.95**
	55888400	DN 400	1 pc(s).		**74.50**
	55888500	DN 500	1 pc(s).		**99.30**
	55888600	DN 600	1 pc(s).		**138.20**
	55888800	DN 800	1 pc(s).		**388.50**

[1] For lubricant for watertight coupling joints, see page 62.

AquaPipe® accessories

Product	Cat. no.	Technical data	PU	DG	Price [€/pc.]
15° bend 2 sealing rings included	55823150	DN 150	1 pc(s).	EX34	**13.25**
	55823200	DN 200	1 pc(s).		**25.85**
	55823250	DN 250	1 pc(s).		**122.25**
	55823300	DN 300	1 pc(s).		**152.80**
	55823350	DN 350	1 pc(s).		**253.60**
	55823400	DN 400	1 pc(s).		**256.95**
	55823500	DN 500	1 pc(s).		**609.00**
	55823600	DN 600	1 pc(s).		**1,236.00**

30° bend 2 sealing rings included	55822150	DN 150	1 pc(s).	EX34	**14.35**
	55822200	DN 200	1 pc(s).		**36.90**
	55822250	DN 250	1 pc(s).		**143.35**
	55822300	DN 300	1 pc(s).		**176.40**
	55822350	DN 350	1 pc(s).		**333.35**
	55822400	DN 400	1 pc(s).		**291.70**
	55822500	DN 500	1 pc(s).		**661.50**
	55822600	DN 600	1 pc(s).		**1,277.00**

45° bend 2 sealing rings included	55821150	DN 150	1 pc(s).	EX34	**17.65**
	55821200	DN 200	1 pc(s).		**29.05**
	55821250	DN 250	1 pc(s).		**194.45**
	55821300	DN 300	1 pc(s).		**243.10**
	55821350	DN 350	1 pc(s).		**416.70**
	55821400	DN 400	1 pc(s).		**423.60**
	55821500	DN 500	1 pc(s).		**903.00**
	55821600	DN 600	1 pc(s).		**1,458.00**

90° bend 2 sealing rings included	55820150	DN 150	1 pc(s).	EX34	**82.70**
	55820200	DN 200	1 pc(s).		**99.25**
	55820250	DN 250	1 pc(s).		**333.35**
	55820300	DN 300	1 pc(s).		**430.55**
	55820350	DN 350	1 pc(s).		**485.10**
	55820400	DN 400	1 pc(s).		**597.20**
	55820500	DN 500	1 pc(s).		**1,890.00**
	55820600	DN 600	1 pc(s).		**2,430.00**

Recommended retail price. Actual design may differ.
Actual dimensions may differ within the scope of production tolerances.

AquaPipe® accessories

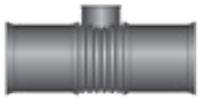

Product	Cat. no.	Technical data	PU	DG	Price [€/pc.]
Tee 3 sealing rings included	55830150	DN 150/150	1 pc(s).	EX34	**201.40**
	55830200	DN 200/200	1 pc(s).		**256.95**
	55831200	DN 200/150	1 pc(s).		**216.70**
	55830250	DN 250/250	1 pc(s).		**340.30**
	55831250	DN 250/200	1 pc(s).		**305.60**
	55832250	DN 250/150	1 pc(s).		**305.60**
	55830300	DN 300/300	1 pc(s).		**506.95**
	55831300	DN 300/250	1 pc(s).		**433.55**
	55832300	DN 300/200	1 pc(s).		**411.50**
	55833300	DN 300/150	1 pc(s).		**577.20**
	55831350	DN 350/300	1 pc(s).		**666.70**
	55832350	DN 350/250	1 pc(s).		**507.15**
	55833350	DN 350/200	1 pc(s).		**463.05**
	55834350	DN 350/150	1 pc(s).		**374.85**
	55832400	DN 400/300	1 pc(s).		**847.20**
	55833400	DN 400/250	1 pc(s).		**847.20**
	55834400	DN 400/200	1 pc(s).		**442.15**
	55835400	DN 400/150	1 pc(s).		**429.55**
	55833500	DN 500/300	1 pc(s).		**1,040.00**
	55834500	DN 500/250	1 pc(s).		**952.00**
	55835500	DN 500/200	1 pc(s).		**798.90**
	55836500	DN 500/150	1 pc(s).		**670.00**
	55834600	DN 600/300	1 pc(s).		**1,220.00**
	55835600	DN 600/250	1 pc(s).		**1,096.00**
	55836600	DN 600/200	1 pc(s).		**885.00**
	55837600	DN 600/150	1 pc(s).		**896.80**

Recommended retail price. Actual design may differ.
Actual dimensions may differ within the scope of production tolerances.

AquaPipe® accessories

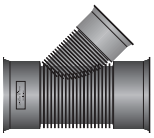

Product	Cat. no.	Technical data	PU	DG	Price [€/pc.]
45° wye 3 sealing rings included	55840150	DN 150/150	1 pc(s).	EX34	**30.90**
	55840200	DN 200/200	1 pc(s).		**458.45**
	55841200	DN 200/150	1 pc(s).		**40.50**
	55840250	DN 250/250	1 pc(s).		**638.90**
	55841250	DN 250/200	1 pc(s).		**666.70**
	55842250	DN 250/150	1 pc(s).		**56.95**
	55840300	DN 300/300	1 pc(s).		**652.80**
	55841300	DN 300/250	1 pc(s).		**750.00**
	55842300	DN 300/200	1 pc(s).		**583.35**
	55843300	DN 300/150	1 pc(s).		**71.65**
	55841350	DN 350/300	1 pc(s).		**791.70**
	55842350	DN 350/250	1 pc(s).		**611.10**
	55843350	DN 350/200	1 pc(s).		**513.90**
	55844350	DN 350/150	1 pc(s).		**352.80**
	55840400	DN 400/400	1 pc(s).		**1,527.00**
	55842400	DN 400/300	1 pc(s).		**861.10**
	55843400	DN 400/250	1 pc(s).		**923.60**
	55844400	DN 400/200	1 pc(s).		**653.65**
	55845400	DN 400/150	1 pc(s).		**452.05**
	55840500	DN 500/500	1 pc(s).		**2,310.00**
	55843500	DN 500/300	1 pc(s).		**1,666.00**
	55844500	DN 500/250	1 pc(s).		**1,597.00**
	55845500	DN 500/200	1 pc(s).		**1,277.00**
	55846500	DN 500/150	1 pc(s).		**1,097.00**
	55844600	DN 600/300	1 pc(s).		**2,291.00**
	55845600	DN 600/250	1 pc(s).		**1,277.00**
	55846600	DN 600/200	1 pc(s).		**1,198.00**
	55847600	DN 600/150	1 pc(s).		**1,226.00**

Reducer 2 sealing rings included	55811200	DN 200/150	1 pc(s).	EX34	**82.70**
	55811250	DN 250/200	1 pc(s).		**159.75**
	55811300	DN 300/250	1 pc(s).		**242.55**
	55811350	DN 350/300	1 pc(s).		**255.20**
	55811400	DN 400/350	1 pc(s).		**286.65**
	55811500	DN 500/400	1 pc(s).		**370.85**
	55812300	DN 300/200	1 pc(s).		**237.05**
	55812400	DN 400/300	1 pc(s).		**303.20**
	55813300	DN 300/150	1 pc(s).		**165.40**

Recommended retail price. Actual design may differ.
Actual dimensions may differ within the scope of production tolerances.

AquaPipe® accessories

Product	Cat. no.	Technical data	PU	DG	Price [€/pc.]
KG adapter KG coupling push-fit; 1 sealing ring included	55861150	DN 150	1 pc(s).	EX34	**10.15**
	55861200	DN 200	1 pc(s).		**25.60**
	55861250	DN 250	1 pc(s).		**60.65**
	55861300	DN 300	1 pc(s).		**71.65**
	55861350	DN 350	1 pc(s).		**250.00**
	55861400	DN 400	1 pc(s).		**255.25**
	55861500	DN 500	1 pc(s).		**402.80**
	55861600	DN 600	1 pc(s).		**430.00**

Outlet with flap valve 1 sealing ring included	5587915099	DN 150	1 pc(s).	EX34	**130.20**
	5587920099	DN 200	1 pc(s).		**166.70**
	5587925099	DN 250	1 pc(s).		**208.35**
	5587930099	DN 300	1 pc(s).		**256.95**
	5587935099	DN 350	1 pc(s).		**305.55**
	5587940099	DN 400	1 pc(s).		**312.50**
	5587950099	DN 500	1 pc(s).		**413.45**
	55879600	DN 600	1 pc(s).		**777.80**

End cap water-tight 1 sealing ring included	55880150	DN 150	1 pc(s).	EX34	**8.80**
	55880200	DN 200	1 pc(s).		**72.25**
	55880250	DN 250	1 pc(s).		**95.85**
	55880300	DN 300	1 pc(s).		**103.55**
	55880350	DN 350	1 pc(s).		**138.55**
	55880400	DN 400	1 pc(s).		**145.85**
	55880500	DN 500	1 pc(s).		**208.40**
	55880600	DN 600	1 pc(s).		**222.30**
	5588080099	DN 800	1 pc(s).		**430.60**

Concrete connection set 1 sealing ring included	55887155	DN 150; Ø 186 mm core drill hole required	1 pc(s).	EX34	**30.30**
	55887205	DN 200; Ø 226 mm core drill hole required	1 pc(s).		**46.30**
	55887255	DN 250; Ø 306 mm core drill hole required	1 pc(s).		**210.00**
	55887305	DN 300; Ø 341 mm core drill hole required	1 pc(s).		**135.00**
	55887355	DN 350; Ø 382 mm core drill hole required	1 pc(s).		**187.45**
	55887405	DN 400; Ø 426 mm core drill hole required	1 pc(s).		**319.00**
	55887505	DN 500; Ø 526 mm core drill hole required	1 pc(s).		**415.00**

Recommended retail price. Actual design may differ.
Actual dimensions may differ within the scope of production tolerances.

AquaDock®

The AquaDock set consists of a retrofit connection and a profile sealing ring DN 150.
90° connections are available for new installations and existing pipe systems.

Application: 90° connection of lateral inlets with AquaPipe transport pipe.

Product	Cat. no.	Technical data	PU	DG	Price [€/pc.]
AquaDock	55673301	DN 300 / 150 90°	1 set	EX34	**104.15**
	55673351	DN 350 / 150 90°	1 set		**104.15**
	55673401	DN 400 / 150 90°	1 set		**126.40**
	55673501	DN 500 / 150 90°	1 set		**147.40**
	55673601	DN 600 / 150 90°	1 set		**171.15**

EPDM adapter sealing	55864151	For direct connections of a KG spigot to AquaPipe coupling/ AquaPipe wye DN 150	1 pc(s).	EX34	**10.50**

Each set includes an installation manual.

AquaDock® accessories

Product	Cat. no.	Technical data	PU	DG	Price [€/pc.]
Installation wrench	55698990		1 pc(s).	EX34	**5.40**
AquaDock hole saw	55698994	Pilot drill included Ø 178.5 mm ± 0.5 mm	1 pc(s).	EX34	**755.00**
Drill stand	57698995	Drilling aid for AquaPipe	1 pc(s).	EX34	**990.00**
Pilot drill	55698996	Replacement for hole saw	1 pc(s).	EX34	**44.00**

Saddle

Connection for AquaPipe/AquaFlex DN 200 to AquaPipe from DN 300.
Connection for AquaPipe/AquaFlex DN 150 to AquaPipe DN 800.

Product	Cat. no.	Technical data	PU	DG	Price [€/pc.]
Saddle	55872300	DN 300/KG DN 200 – AquaPipe/AquaFlex	1 set	EX34	**136.70**
	55872400	DN 400/KG DN 200 – AquaPipe/AquaFlex	1 set		**136.70**
	55872500	DN 500/KG DN 200 – AquaPipe/AquaFlex	1 set		**136.70**
	55872600	DN 600/KG DN 200 – AquaPipe/AquaFlex	1 set		**136.70**
	55871800	DN 800/KG DN 150 – AquaPipe/AquaFlex	1 set		**136.70**
	55872800	DN 800/KG DN 200 – AquaPipe/AquaFlex	1 set		**136.70**

One AquaPipe/AquaFlex KG adapter and one sealing ring DN 150 or DN 200 are included with each saddle.

Saddle accessories

Product	Cat. no.	Technical data	PU	DG	Price [€/pc.]
Hole saw for saddle	55698991	DN 800/KG DN 150 (Ø 177 mm)	1 pc(s).	EX34	**577.00**
	55698992	DN 300/DN 400/KG DN 200 (Ø 214.5 mm)	1 pc(s).		**577.00**
	55698993	DN 500/DN 600/DN 800/KG DN 200 (Ø 220 mm)	1 pc(s).		**577.00**

AquaFlex®

SLW/HGV 60

Flexible PE pipe in structured-wall design (corrugated outside, smooth inside). Black outside; blue inside. High load-bearing capacity (SN 8 according to DIN EN ISO 9969); without coupling. Thanks to its flexibility, no fittings such as elbows or bends are required.

Application: connection pipe between road gully and shaft and/or main drainage pipe.

Product	Cat. no.	Technical data			PU	DG	Price [€/m]
AquaFlex	55151150	DN 150	D_I = 147	D_O = 173	25 m coil	EX36	**10.80**
	55151200	DN 200	D_I = 197	D_O = 233	25 m coil		**21.75**

Installation instructions

See our AquaPipe installation manual for the installation of AquaFlex!

AquaFlex® accessories

Product	Cat. no.	Technical data	PU	DG	Price [€/pc.]
Shaft coupling	55688150	DN 150 (for road gully)	1 pc(s).	EX36	**8.20**
KG adapter (push-fit KG coupling) 1 sealing ring included	5566115199	DN 150	1 pc(s).	EX36	**10.15**
	5566120199	DN 200	1 pc(s).		**25.60**
Adapter 1 sealing ring included	5569899899	To clay pipe DN 150; (push-fit to clay L coupling)	1 pc(s).	EX36	**10.15**
Concrete pipe connection set 3-piece	55687155	DN 150; (Ø 186 mm core drill hole required)	1 set	EX36	**30.30**
	55687205	DN 200; (Ø 226 mm core drill hole required)	1 set		**46.30**
45° wye 3 sealing rings included	5564015199	DN 150/150	1 pc(s).	EX36	**30.90**
	5564120199	DN 200/150	1 pc(s).		**40.50**
	5564020199	DN 200/200	1 pc(s).		**458.45**
Coupling 2 sealing rings included	5561715099	DN 150	1 pc(s).	EX36	**12.00**
	5561720099	DN 200	1 pc(s).		**23.10**
Profile sealing ring [1]	55617151	DN 150	1 pc(s).	EX36	**2.10**
	55617201	DN 200	1 pc(s).		**3.70**

[1] For lubricant for watertight coupling joints, see page 62.

Recommended retail price. Actual design may differ.
Actual dimensions may differ within the scope of production tolerances.

AquaTraffic® Control

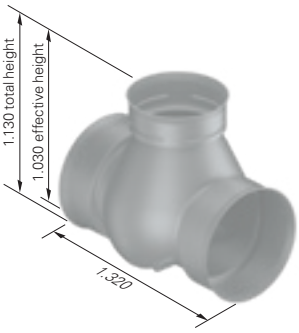

Inside diameter of base body greater than 900 mm. PE-HD flushing and inspection shaft; monolithic base body without weld seams; colour black; UV-resistant; weight smaller than or equal to 40 kg; extremely durable and hard-wearing; impact-resistant and break-resistant from –20 °C to +80 °C; resistant to oils, acids, bases, greases, gasoline, diesel fuel according to DIN 8075 supplementary sheet 1.
With integrated compensating area; connection of standard covers 625 mm.

Application: flushing and inspection shaft for all fields of civil engineering and road engineering.

Product	Cat. no.	Technical data	PU	DG	Price [€/pc.]
AquaTrafficControl shaft 180°	55508300	2/300	1 pc(s).	EX22	**454.00**
	55508400	2/400	1 pc(s).		**454.00**
	55508500	2/500	1 pc(s).		**528.00**
	55508600	2/600	1 pc(s).		**528.00**
AquaTrafficControl 180° with reducer	55508402	300/400	1 pc(s).	EX22	**482.00**
	55508501	400/500	1 pc(s).		**528.00**
	55508601	500/600	1 pc(s).		**528.00**
AquaTrafficControl start shaft/target shaft	55506300	300	1 pc(s).	EX22	**454.00**
	55506400	400	1 pc(s).		**454.00**
	55506500	500	1 pc(s).		**528.00**
	55506600	600	1 pc(s).		**528.00**

AquaTraffic® Control HP

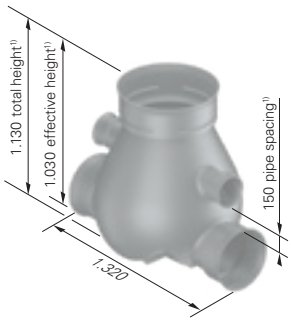

The piggyback arrangement consists of an AquaPipe DN 300 to DN 600 transport pipe with top Strabusil DN 150 drainage pipe. Clear pipe spacing is 15 cm.

Application: flushing and inspection shaft for all fields of civil engineering and road engineering.

Product	Cat. no.	Technical data	PU	DG	Price [€/pc.]
AquaTrafficControl HP shaft 180°	55508315	2/300	1 pc(s).	EX22	**546.00**
	55508415	2/400	1 pc(s).		**546.00**
	55508515	2/500	1 pc(s).		**619.00**
	55508615	2/600[1)]	1 pc(s).		**619.00**

[1)] For AquaTrafficControl HP 2/600 total height = 1.340, effective height = 1.275 and pipe spacing = 170

AquaTrafficControl HP shaft 180° with reducer	55508412	300/400	1 pc(s).	EX22	**619.00**
	55508511	400/500	1 pc(s).		**964.00**
AquaTrafficControl HP start shaft/target shaft	55506315	300	1 pc(s).	EX22	**546.00**
	55506415	400	1 pc(s).		**546.00**
	55506515	500	1 pc(s).		**619.00**
	55506615	600	1 pc(s).		**793.00**

Recommended retail price. Actual design may differ.
Actual dimensions may differ within the scope of production tolerances.

AquaTraffic® Control V

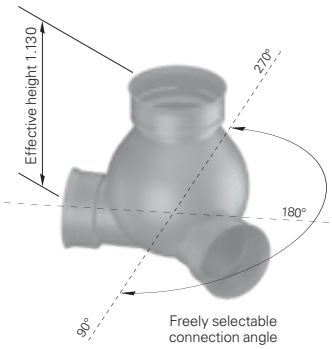

Inside diameter of base body greater than 900 mm.
PE-HD flushing and inspection shaft; with freely selectable connection angle between 90° and 270°; monolithic base body; colour black; UV-resistant; weight approx. 40 kg; extremely durable and hard-wearing; impact-resistant and break-resistant from –20 °C to +80 °C; resistant to oils, acids, bases, greases, gasoline, diesel fuel according to DIN 8075 supplementary sheet 1; with integrated compensating area.

Application: flushing and inspection shaft for all fields of civil engineering and road engineering.

Product	Cat. no.	Technical data	PU	DG	Price [€/pc.]
AquaTrafficControl V shaft with freely selectable connection angle	55509310	2/300	1 pc(s).	EX22	**746.00**
	55509410	2/400	1 pc(s).		
	55509510	2/500	1 pc(s).		
	55509610	2/600	1 pc(s).		

NB www.fraenkische.com

Delivery will be only effected if form has been fully completed and signed!

AquaTraffic® Control V HP

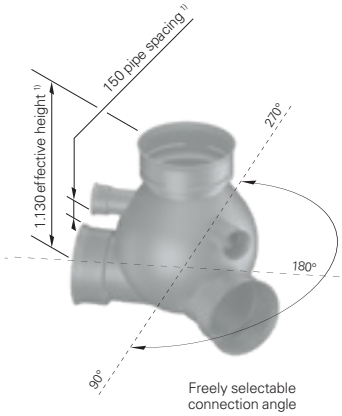

The piggyback arrangement consists of an AquaPipe DN 300 to DN 600 transport pipe with top Strabusil DN 150 drainage pipe. Clear pipe spacing is 15 cm. Weight approx. 40 kg.

Application: flushing and inspection shaft for all fields of civil engineering and road engineering.

Product	Cat. no.	Technical data	PU	DG	Price [€/pc.]
AquaTrafficControl V HP with freely selectable connection angle	55509315	2/300	1 pc(s).	EX22	**980.00**
	55509415	2/400	1 pc(s).		
	55509515	2/500	1 pc(s).		
	55509615	2/600 1)	1 pc(s).		

1) For AquaTrafficControl V HP 2/600 effective height = 1.280 and pipe spacing = 170

NB www.fraenkische.com

Delivery will be only effected if form has been fully completed and signed!

AquaTrafficControl® special shaft

Product	Cat. no.	Technical data	PU	Price [€/pc.]
AquaTrafficControl special shaft	55509999	Individual	1 pc(s).	**on request**

NB www.fraenkische.com

Delivery will be only effected if form has been fully completed and signed!

AquaTrafficControl® accessories

DOM sealing ring

Extension pipe

Profile sealing ring for extension pipe

Connection set DN 150

Product	Cat. no.	Technical data	PU	DG	Price [€/pc.]
Extension pipe	55540501	D_O = 600; 1 m length	1 pc(s).	EX22	**63.00**
	55540502	D_O = 600; 2 m length	1 pc(s).		**126.00**
	55540503	D_O = 600; 3 m length	1 pc(s).		**189.00**
	55540506	D_O = 600; 6 m length	1 pc(s).		**378.00**
Coupling	55510600	D_O 600; for extension pipe	1 pc(s).	EX22	**59.00**
Profile sealing ring for extension pipe [1]	55519501	Seal between extension pipe and shaft body	1 pc(s).	EX22	**18.90**
Connection set DN 150 drainage pipe to extension pipe	55573610	For retrofit (on-site) connections of drainage pipes DN 150 to the extension pipe; required drilling Ø 186 mm	1 pc(s).	EX22	**35.70**
DOM sealing ring	55519505	For extension pipe D_O 600; as seal between concrete support ring and extension pipe	1 pc(s).	EX22	**32.60**
Concrete adapter ring	55584006	Connection of standard gully gutter 500 x 500 mm, with 625 mm standard concrete support ring (DIN 4034)	1 pc(s).	EX22	**147.00**
Temporary construction site cover	55580500	Cover (end plug) for extension pipe D_O 600 for the construction period	1 pc(s).	EX22	**24.00**
Support ring acc. to DIN 4034, Part 1	–	60/80/100 mm high	–	–	**to be supplied on site**
Standard covers acc. to DIN EN 124	–	Class B or D CW 610	–	–	**to be supplied on site**
Gully gutter acc. to DIN EN 124 with bucket handle and stretched bucket (acc. to DIN 4052-A4)	–	Classes B, C or D CW 610	–	–	**to be supplied on site**

[1] For lubricant for watertight coupling joints, see page 62.

Recommended retail price. Actual design may differ.
Actual dimensions may differ within the scope of production tolerances.

Strabusil® – drainage pipe SN 4 (PE-HD)

SLW/HGV 60

Locally perforated, totally perforated and multi-purpose PE-HD pipe according to DIN 4262-1, type R2, total perforation area greater than or equal to 50 cm²/m for LP, TP, MP, 1.2 mm ± 0.4 mm perforation width.
Can be used in compliance with REwS (Directives relating to road drainage) SN 4 according to DIN EN ISO 9969.

Application: drainage pipe to reliably drain roads, air fields, sports fields and when drainage pipes must meet increased requirements.

NB

Custom pipes available on request.

Strabusil® LP

Structured-wall (corrugated outside, smooth inside) locally perforated PE-HD pipe with coupling. Colour black, with white crown marking.

LP locally perforated pipes

Product	Cat. no.	Technical data			PU	Price [€/m]
Strabusil LP 6 m length	55110100	DN/ID 100	D_I = 104	D_O = 118	540 m/pal.	**4.30**
	55110150	DN/ID 150	D_I = 155	D_O = 174	252 m/pal.	**7.95**
	55110200	DN/ID 200	D_I = 202	D_O = 236	138 m/pal.	**16.35**
	55110250	DN/ID 250	D_I = 257	D_O = 295	84 m/pal.	**23.65**
	55110300	DN/ID 300	D_I = 303	D_O = 349	54 m/pal.	**33.95**
	55110350	DN/ID 350	D_I = 351	D_O = 400	48 m/pal.	**42.85**
	55110400	DN/ID 400	D_I = 404	D_O = 462	30 m/pal.	**64.25**
	55110500	DN/ID 500	D_I = 502	D_O = 573	24 m/pal.	**101.65**
	55110600	DN/ID 600	D_I = 601	D_O = 686	18 m/pal.	**136.00**

Strabusil® TP

Structured-wall (corrugated outside, smooth inside) totally perforated PE-HD pipe with coupling. Colour black.

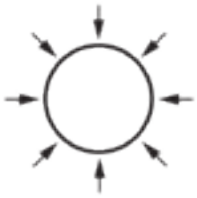

TP totally perforated pipes

Product	Cat. no.	Technical data			PU	Price [€/m]
Strabusil TP 6 m length	55100100	DN/ID 100	D_I = 104	D_O = 118	540 m/pal.	**4.30**
	55100150	DN/ID 150	D_I = 155	D_O = 174	252 m/pal.	**7.95**
	55100200	DN/ID 200	D_I = 202	D_O = 236	138 m/pal.	**16.35**
	55100250	DN/ID 250	D_I = 257	D_O = 295	84 m/pal.	**23.65**
	55100300	DN/ID 300	D_I = 303	D_O = 349	54 m/pal.	**33.95**
	55100350	DN/ID 350	D_I = 351	D_O = 400	48 m/pal.	**42.85**
	55100400	DN/ID 400	D_I = 404	D_O = 462	30 m/pal.	**64.25**
	55100500	DN/ID 500	D_I = 502	D_O = 573	24 m/pal.	**101.65**
	55100600	DN/ID 600	D_I = 601	D_O = 686	18 m/pal.	**136.00**

Recommended retail price. Actual design may differ.
Actual dimensions may differ within the scope of production tolerances.

Strabusil® MP

MP multi-purpose pipes

Structured-wall (corrugated outside, smooth inside) multi-purpose PE-HD pipe, with watertight coupling connection including sealing ring. Colour black, with white crown marking.

Product	Cat. no.	Technical data			PU	Price [€/m]
Strabusil MP 6 m length	55120200	DN/ID 200	D_I = 202	D_O = 236	138 m/pal.	**18.00**
	55120250	DN/ID 250	D_I = 257	D_O = 295	84 m/pal.	**26.05**
	55120300	DN/ID 300	D_I = 303	D_O = 349	54 m/pal.	**37.40**
	55120350	DN/ID 350	D_I = 351	D_O = 400	48 m/pal.	**47.15**
	55120400	DN/ID 400	D_I = 404	D_O = 462	30 m/pal.	**70.65**
	55120500	DN/ID 500	D_I = 502	D_O = 573	24 m/pal.	**111.00**
	55120600	DN/ID 600	D_I = 601	D_O = 686	18 m/pal.	**149.00**

One additional sealing ring per pipe is included in the scope of delivery.

Strabusil® accessories

Product	Cat. no.	Technical data	PU	DG	Price [€/pc.]
Coupling	55610100	DN 100	1 pc(s).	EX26	**5.30**
	55610150	DN 150	1 pc(s).		**9.45**
	55610200	DN 200	1 pc(s).		**28.15**
	55610250	DN 250	1 pc(s).		**29.35**
	55610300	DN 300	1 pc(s).		**35.80**
	55610350	DN 350	1 pc(s).		**56.20**
	55610400	DN 400	1 pc(s).		**65.30**
	55610500	DN 500	1 pc(s).		**164.00**
	55610600	DN 600	1 pc(s).		**320.00**
Profile sealing ring [1]	55619100	DN 100	1 pc(s).	EX26	**4.50**
	55619150	DN 150	1 pc(s).		**5.05**
	55619200	DN 200	1 pc(s).		**8.10**
	55619250	DN 250	1 pc(s).		**12.70**
	55619300	DN 300	1 pc(s).		**18.65**
	55619350	DN 350	1 pc(s).		**26.25**
	55619400	DN 400	1 pc(s).		**30.65**
	55619500	DN 500	1 pc(s).		**46.30**
	55619600	DN 600	1 pc(s).		**72.80**
30° bend	55622100	DN 100	1 pc(s).	EX26	**34.50**
	55622150	DN 150	1 pc(s).		**52.50**
45° bend	55621100	DN 100	1 pc(s).	EX26	**34.35**
	55621150	DN 150	1 pc(s).		**51.50**
	55621200	DN 200	1 pc(s).		**164.65**
	55621250	DN 250	1 pc(s).		**293.60**
	55621300	DN 300	1 pc(s).		**333.10**
	55621350	DN 350	1 pc(s).		**492.60**
	55621400	DN 400	1 pc(s).		**864.00**
90° bend	55620100	DN 100	1 pc(s).	EX26	**41.30**
	55620150	DN 150	1 pc(s).		**61.00**
	55620200	DN 200	1 pc(s).		**200.60**
	55620250	DN 250	1 pc(s).		**420.00**
	55620300	DN 300	1 pc(s).		**425.00**
	55620350	DN 350	1 pc(s).		**440.30**
	55620400	DN 400	1 pc(s).		**1,310.00**

[1] For lubricant for watertight coupling joints, see page 62.

Strabusil® accessories

Product	Cat. no.	Technical data	PU	DG	Price [€/pc.]
End plug	55680100	DN 100	1 pc(s).	EX26	**5.35**
	55680150	DN 150	1 pc(s).		**8.60**
	55680200	DN 200	1 pc(s).		**12.80**
	55680250	DN 250	1 pc(s).		**16.30**
	55680300	DN 300	1 pc(s).		**19.55**
	55680350	DN 350	1 pc(s).		**23.50**
SD end cap	55680400	DN 400	1 pc(s).	EX26	**36.80**
Outlet with flap valve	55679100	DN 100; 1 m length	1 pc(s).	EX26	**86.10**
	55679150	DN 150; 1 m length	1 pc(s).		**122.85**
	5567920099	DN 200; 1 m length	1 pc(s).		**191.10**
	5567925099	DN 250; 1 m length	1 pc(s).		**460.95**
	5567930099	DN 300; 1 m length	1 pc(s).		**491.40**
	5567935099	DN 350; 1 m length	1 pc(s).		**516.60**
	5567940099	DN 400; 1 m length	1 pc(s).		**593.25**
Shaft lining/ PE coupling	55689100	DN 100	1 pc(s).	EX26	**5.30**
	55689150	DN 150	1 pc(s).		**9.45**
PVC shaft lining	55689200	DN 200	1 pc(s).	EX26	**28.15**
	55689250	DN 250	1 pc(s).		**29.35**
	55689300	DN 300	1 pc(s).		**43.85**
	55689350	DN 350	1 pc(s).		**56.80**
	55689400	DN 400	1 pc(s).		**70.55**

Technical consultation required before installation; for optional GRP shaft lining, see page 43.

Tee	55630100	DN 100	1 pc(s).	EX26	**52.15**
	55630150	DN 150	1 pc(s).		**113.00**
	55630200	DN 200	1 pc(s).		**217.90**
	55630250	DN 250	1 pc(s).		**933.35**
	55630300	DN 300	1 pc(s).		**617.40**
	55630350	DN 350	1 pc(s).		**639.50**
	55630400	DN 400	1 pc(s).		**2,200.00**
Tee with reducer	55631150	DN 150/100	1 pc(s).	EX26	**79.55**
	55631200	DN 200/150	1 pc(s).		**167.10**
	55632200	DN 200/100	1 pc(s).		**138.40**
	55631250	DN 250/200	1 pc(s).		**435.60**
	55632250	DN 250/150	1 pc(s).		**196.00**
	55633250	DN 250/100	1 pc(s).		**466.70**
	55632350	DN 350/200	1 pc(s).		**419.65**
	55633350	DN 350/150	1 pc(s).		**420.00**
	55634350	DN 350/100	1 pc(s).		**777.00**
Tee with reducer/ DN 80 Drän	55632150	DN 150 / DN 80 Drän	1 pc(s).	EX26	**78.00**

Recommended retail price. Actual design may differ.
Actual dimensions may differ within the scope of production tolerances.

Strabusil® accessories

Product	Cat. no.	Technical data	PU	DG	Price [€/pc.]
45° wye	55640100	DN 100	1 pc(s).	EX26	**53.90**
	55640150	DN 150	1 pc(s).		**127.60**
	55640200	DN 200	1 pc(s).		**233.10**
	55640250	DN 250	1 pc(s).		**907.40**
	55640300	DN 300	1 pc(s).		**829.65**
	55640350	DN 350	1 pc(s).		**787.90**
	55640401	DN 400	1 pc(s).		**3,210.00**

45° wye with reducer	55641150	DN 150/100	1 pc(s).	EX26	**93.50**
	55641200	DN 200/150	1 pc(s).		**192.35**
	55642200	DN 200/100	1 pc(s).		**157.00**
	55641250	DN 250/200	1 pc(s).		**740.00**
	55642250	DN 250/150	1 pc(s).		**244.90**
	55643250	DN 250/100	1 pc(s).		**690.00**
	55643300	DN 300/150	1 pc(s).		**143.30**
	55642350	DN 350/200	1 pc(s).		**568.00**
	55643350	DN 350/150	1 pc(s).		**445.00**
	55644350	DN 350/100	1 pc(s).		**520.00**

Reducer	55611150	DN 150/100	1 pc(s).	EX26	**68.45**
	55611200	DN 200/150	1 pc(s).		**163.20**
	55612200	DN 200/100	1 pc(s).		**216.40**
	55611250	DN 250/200	1 pc(s).		**269.40**
	55612250	DN 250/150	1 pc(s).		**248.20**
	55613250	DN 250/100	1 pc(s).		**225.30**
	55611350	DN 350/250	1 pc(s).		**349.60**
	55612350	DN 350/200	1 pc(s).		**355.20**
	55613350	DN 350/150	1 pc(s).		**479.70**
	55614350	DN 350/100	1 pc(s).		**290.40**

KG adapter with KG spigot (push-fit KG coupling)	55661100	DN 100/100	1 pc(s).	EX26	**13.80**
	55661150	DN 150/150	1 pc(s).		**23.45**
	55661200	DN 200/200	1 pc(s).		**61.30**
	55661250	DN 250/250	1 pc(s).		**88.30**
	55661300	DN 300/300	1 pc(s).		**143.30**

KG adapter with KG coupling (KG spigot can be inserted)	55660100	DN 100/100	1 pc(s).	EX26	**12.90**
	55660150	DN 150/150	1 pc(s).		**20.50**
	55660200	DN 200/200	1 pc(s).		**55.60**

KG adapter with KG coupling (KG spigot can be inserted) with reducer	55660310	DN 300/100	1 pc(s).	EX26	**187.40**
	55660315	DN 300/150	1 pc(s).		**187.40**
	55660320	DN 300/200	1 pc(s).		**198.40**

Strasil adapter	55663100	DN 100/100	1 pc(s).	EX26	**68.40**
	55663150	DN 150/150	1 pc(s).		**76.30**

Recommended retail price. Actual design may differ.
Actual dimensions may differ within the scope of production tolerances.

Strabusil® UP

UP unperforated

Unperforated PE-HD pipe in structured-wall design (corrugated outside, smooth inside) with coupling and sealing ring. SN 4 according to DIN EN ISO 9969; colour black.

Product	Cat. no.	Technical data			PU	Price [€/m]
Strabusil UP [1] 6 m length	5513010099	DN/ID 100	D_I = 104	D_O = 118	540 m/pal.	**5.45**
	5513015099	DN/ID 150	D_I = 155	D_O = 174	252 m/pal.	**8.85**
	5513020099	DN/ID 200	D_I = 202	D_O = 236	138 m/pal.	**16.30**
	5513025099	DN/ID 250	D_I = 257	D_O = 295	84 m/pal.	**22.95**
	5513030099	DN/ID 300	D_I = 303	D_O = 349	54 m/pal.	**32.95**
	5513035099	DN/ID 350	D_I = 351	D_O = 400	48 m/pal.	**41.60**
	5513040099	DN/ID 400	D_I = 404	D_O = 462	30 m/pal.	**62.60**
	5513050099	DN/ID 500	D_I = 502	D_O = 573	24 m/pal.	**89.20**
	5513060099	DN/ID 600	D_I = 601	D_O = 686	18 m/pal.	**115.40**

[1] The delivery includes loose couplings and sealing rings.

NB

When used as stormwater pipe, you must use the fittings from the AquaPipe accessories (see pages 46 – 51).

Lubricant

Product	Cat. no.	Technical data	PU	DG	Price [€/pc.]
Lubricant	55690000	500 ml tube	1 pc(s).	EX26	**8.30**
	55691000	10 kg bucket	1 pc(s).		**82.85**

NB

The lubricant is required for watertight coupling connections with profile sealing rings for the following pipes and fittings: **AquaPipe, AquaFlex, Kabuflex, Strabusil, StormPipe, Strasil.**

Recommended retail price. Actual design may differ.
Actual dimensions may differ within the scope of production tolerances.

StormPipe drainage pipe SN 8 (PE-HD)

Locally perforated, totally perforated and multi-purpose PE-HD pipe according to DIN 4262-1, type R2, total perforation area greater than or equal to 50 cm²/m for LP, TP and MP, 1.2 mm ± 0.4 mm perforation width.
Can be used in compliance with REwS (Directives relating to road drainage) SN 8 according to DIN EN ISO 9969.

Application: drainage pipe to reliably drain roads, air fields, sports fields and when drainage pipes must meet highest requirements.

StormPipe LP

SLW/HGV 60

LP locally perforated pipes

Structured-wall (corrugated outside, smooth inside) locally perforated pipe with coupling. Black outside, grey inside, with white crown marking.

Product	Cat. no.	Technical data			PU	Price [€/m]
StormPipe LP 6 m length	5511810099	DN/ID 100	D_I = 104	D_O = 118	648 m	**3.55**
	5511815099	DN/ID 150	D_I = 149	D_O = 173	288 m	**6.00**
	5511820099	DN/ID 200	D_I = 203	D_O = 236	162 m	**10.25**
	5511825099	DN/ID 250	D_I = 255	D_O = 295	108 m	**15.95**
	5511830099	DN/ID 300	D_I = 300	D_O = 349	72 m	**21.70**
	5511835099	DN/ID 350	D_I = 347	D_O = 399	48 m	**31.10**
	5511840099	DN/ID 400	D_I = 399	D_O = 461	30 m	**41.70**
	5511850099	DN/ID 500	D_I = 499	D_O = 570	24 m	**62.45**
	5511860099	DN/ID 600	D_I = 596	D_O = 684	18 m	**86.25**

One coupling per pipe is included in the scope of delivery.

StormPipe TP

SLW/HGV 60

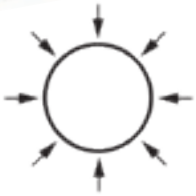

TP totally perforated pipes

Structured-wall (corrugated outside, smooth inside) totally perforated pipe with coupling. Black outside, grey inside.

Product	Cat. no.	Technical data			PU	Price [€/m]
StormPipe TP 6 m length	5510810099	DN/ID 100	D_I = 104	D_O = 118	648 m	**3.55**
	5510815099	DN/ID 150	D_I = 149	D_O = 173	288 m	**6.00**
	5510820099	DN/ID 200	D_I = 203	D_O = 236	162 m	**10.25**
	5510825099	DN/ID 250	D_I = 255	D_O = 295	108 m	**15.95**
	5510830099	DN/ID 300	D_I = 300	D_O = 349	72 m	**21.70**
	5510835099	DN/ID 350	D_I = 347	D_O = 399	48 m	**31.10**
	5510840099	DN/ID 400	D_I = 399	D_O = 461	30 m	**41.70**
	5510850099	DN/ID 500	D_I = 499	D_O = 570	24 m	**62.45**
	5510860099	DN/ID 600	D_I = 596	D_O = 684	18 m	**86.25**

One coupling per pipe is included in the scope of delivery.

Recommended retail price. Actual design may differ.
Actual dimensions may differ within the scope of production tolerances.

StormPipe LP and TP accessories

Product	Cat. no.	Technical data	PU	Price [€/pc.]
Coupling	55917100	DN 100	1 pc(s).	**2.70**
	55917150	DN 150	1 pc(s).	**4.60**
	55917200	DN 200	1 pc(s).	**14.35**
	55917250	DN 250	1 pc(s).	**17.10**
	55917300	DN 300	1 pc(s).	**19.85**
	55917350	DN 350	1 pc(s).	**27.25**
	55917400	DN 400	1 pc(s).	**39.70**
	55917500	DN 500	1 pc(s).	**82.05**
	55917600	DN 600	1 pc(s).	**159.85**

StormPipe MP

SLW/HGV 60

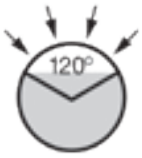

MP multi-purpose pipes

Structured-wall (corrugated outside, smooth inside) multi-purpose pipe with coupling and profile sealing ring for watertight connections. Black outside, grey inside, with white crown marking.

Product	Cat. no.	Technical data			PU	Price [€/m]
StormPipe MP 6 m length	5512810099	DN/ID 100	D_I = 104	D_O = 118	648 m	**3.90**
	5512815099	DN/ID 150	D_I = 149	D_O = 173	288 m	**6.60**
	5512820099	DN/ID 200	D_I = 203	D_O = 236	162 m	**11.30**
	5512825099	DN/ID 250	D_I = 255	D_O = 295	108 m	**17.55**
	5512830099	DN/ID 300	D_I = 300	D_O = 349	72 m	**23.80**
	5512835099	DN/ID 350	D_I = 347	D_O = 399	48 m	**34.25**
	5512840099	DN/ID 400	D_I = 399	D_O = 461	30 m	**45.90**
	5512850099	DN/ID 500	D_I = 499	D_O = 570	24 m	**68.70**
	5512860099	DN/ID 600	D_I = 596	D_O = 684	18 m	**94.90**

One additional sealing ring per pipe is included in the scope of delivery.

StormPipe MP accessories

Product	Cat. no.	Technical data	PU	DG	Price [€/pc.]
Coupling 2 sealing rings included	55910100	DN 100	1 pc(s).	EX34	**6.40**
	55910150	DN 150	1 pc(s).		**12.00**
	55910200	DN 200	1 pc(s).		**23.10**
	55910250	DN 250	1 pc(s).		**27.80**
	55910300	DN 300	1 pc(s).		**35.10**
	55910350	DN 350	1 pc(s).		**36.40**
	55910400	DN 400	1 pc(s).		**53.90**
	55910500	DN 500	1 pc(s).		**86.80**
	55910600	DN 600	1 pc(s).		**169.85**

For lubricant for watertight coupling joints, see page 62.

StormPipe LP, TP and MP accessories

NB

Order sealing rings separately for StormPipe MP accessories.

Product	Cat. no.	Technical data	PU	DG	Price [€/pc.]
Profile sealing ring [1]	55919100	DN 100	1 pc(s).	EX34	**1.80**
	55919150	DN 150	1 pc(s).		**2.10**
	55919200	DN 200	1 pc(s).		**3.70**
	55919250	DN 250	1 pc(s).		**5.00**
	55919300	DN 300	1 pc(s).		**6.10**
	55919350	DN 350	1 pc(s).		**10.05**
	55919400	DN 400	1 pc(s).		**13.80**
	55919500	DN 500	1 pc(s).		**23.15**
	55919600	DN 600	1 pc(s).		**36.40**
WD end cap	55980150	DN 150	1 pc(s).	EX34	**8.80**
	55980200	DN 200	1 pc(s).		**72.25**
	55980250	DN 250	1 pc(s).		**95.85**
	55980300	DN 300	1 pc(s).		**103.55**
	55980350	DN 350	1 pc(s).		**138.55**
	55980400	DN 400	1 pc(s).		**145.85**
	55980500	DN 500	1 pc(s).		**208.40**
Adapter StormPipe/ KG spigot	55961150	DN 150	1 pc(s).	EX34	**10.15**
	55961200	DN 200	1 pc(s).		**25.60**
	55961250	DN 250	1 pc(s).		**60.65**
	55961300	DN 300	1 pc(s).		**71.65**
	55961350	DN 350	1 pc(s).		**236.10**
	55961400	DN 400	1 pc(s).		**255.25**
	55961500	DN 500	1 pc(s).		**402.80**
45° wye	55940150	DN 150/150	1 pc(s).	EX34	**30.90**
	55940200	DN 200/200	1 pc(s).		**458.45**
	55940250	DN 250/250	1 pc(s).		**638.90**
	55940300	DN 300/300	1 pc(s).		**652.80**
15° bend	55923150	DN 150	1 pc(s).	EX34	**13.25**
	55923200	DN 200	1 pc(s).		**25.85**
	55923250	DN 250	1 pc(s).		**122.25**
	55923300	DN 300	1 pc(s).		**152.80**
	55923350	DN 350	1 pc(s).		**253.60**
	55923400	DN 400	1 pc(s).		**256.95**
	55923500	DN 500	1 pc(s).		**609.00**
	55923600	DN 600	1 pc(s).		**1,236.00**

[1] For lubricant for watertight coupling joints, see page 62.

NB

Please see AquaPipe accessories for more fittings p. 46 – 51.

StormPipe LP, TP and MP accessories

NB

Order sealing rings separately for StormPipe MP accessories.

Product	Cat. no.	Technical data	PU	DG	Price [€/pc.]
30° bend	55922150	DN 150	1 pc(s).	EX34	**14.35**
	55922200	DN 200	1 pc(s).		**36.90**
	55922250	DN 250	1 pc(s).		**143.35**
	55922300	DN 300	1 pc(s).		**176.40**
	55922350	DN 350	1 pc(s).		**333.35**
	55922400	DN 400	1 pc(s).		**291.70**
	55922500	DN 500	1 pc(s).		**661.50**
	55922600	DN 600	1 pc(s).		**1,277.00**
45° bend	55921150	DN 150	1 pc(s).	EX34	**17.65**
	55921200	DN 200	1 pc(s).		**29.05**
	55921250	DN 250	1 pc(s).		**194.45**
	55921300	DN 300	1 pc(s).		**243.10**
	55921350	DN 350	1 pc(s).		**416.70**
	55921400	DN 400	1 pc(s).		**423.60**
	55921500	DN 500	1 pc(s).		**903.00**
	55921600	DN 600	1 pc(s).		**1,458.00**

StrabuControl®

Certified jetting resistance

Proof of CCTV inspection

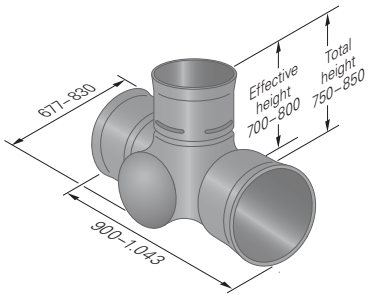

Inside diameter of base body greater than 500 mm.
PE-HD flushing and inspection shaft; colour black. UV-resistant; weight approx. 11 kg/12 kg, extremely durable and hard-wearing. Resistant to oils, acids, bases, greases, gasoline, diesel fuel according to DIN 8075 supplementary sheet 1; with integrated compensating area. Watertight, complies with DIN 4262-1. Installation in traffic areas possible.

Application: flushing and inspection shaft for StormPipe and Strabusil drainage pipes for all fields of civil engineering and road engineering. Can be directly connected to StormPipe and Strabusil pipes using sealing rings.

Product	Cat. no.	Technical data	PU	DG	Price [€/pc.]
StrabuControl	55500402	2/250 180° shaft	1 pc(s).	EX22	**218.00**
	55500403	3/250 90° wye shaft	1 pc(s).		**319.00**
	55500404	4/250 cross shaft	1 pc(s).		**567.00**
	55501403	3/350 90° wye shaft	1 pc(s).		**319.00**
	55501404	4/350 cross shaft	1 pc(s).		**567.00**
	55502402	2/400 180° shaft	1 pc(s).		**319.00**

StrabuControl® HP

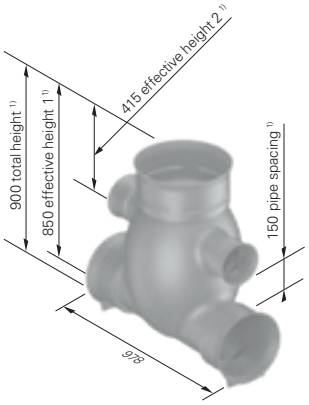

Inside diameter of base body greater than 500 mm.
The piggyback arrangement consists of an AquaPipe DN 250 to DN 350 transport pipe with top Strabusil or StormPipe DN 150 drainage pipe.
Clear pipe spacing is 15 cm.

Application: flushing and inspection shaft for Strabusil and/or StormPipe drainage pipes and AquaPipe transport pipes for all fields of civil engineering and road engineering.

Product	Cat. no.	Technical data	PU	DG	Price [€/pc.]
StrabuControl HP	55501422	2/250 180° shaft	1 pc(s).	EX22	**388.00**
	55501413	3/250 90° wye shaft ①	1 pc(s).		**420.00**
	55501432	2/350 180° shaft 1)	1 pc(s).		**388.00**
	55501412	2/250–150 (90°) 1 inlet/1 outlet DN 250 + inlet DN 150 (lateral 90°) ②	1 pc(s).		**420.00**
	55501433	2/350–150 (90°) 1) 1 inlet/1 outlet DN 350 + inlet DN 150 (lateral 90°) ②	1 pc(s).		**493.00**

1) For StrabuControl HP 2/350: total height = 1.000, effective height 1 = 950, effective height 2 = 400, and pipe spacing = 150

①

②

Recommended retail price. Actual design may differ.
Actual dimensions may differ within the scope of production tolerances.

StrabuControl® special shaft

Product	Cat. no.	Technical data	PU	DG	Price [€/pc.]
StrabuControl special shaft	55500499	individual	1 pc(s).	EX22	**on request**

NB www.fraenkische.com

Delivery will be only effected if form has been fully completed and signed!

StrabuControl 2/150

Compact PE-HD flushing and inspection shaft; consisting of shaft bottom and extension pipe DO 400; colour black. UV-resistant; resistant to oils, acids, bases, greases, gasoline, diesel fuel according to DIN 8075 supplementary sheet 1; watertight according to DIN 4262-1.
Installation in trafficked areas possible; 180° shaft to directly connect Strabusil DN 150 and/or StormPipe DN 150 (also with sealing ring).

Application: flushing and inspection shaft for Strabusil and StormPipe drainage pipes DN 150 for all fields of civil engineering and road engineering.

Product	Cat. no.	Technical data	PU	DG	Price [€/pc.]
StrabuControl 2/150	55500412	180° shaft D_O 400 1 inlet/1 outlet DN 150 Consisting of shaft base body and extension pipe 175 cm total height	1 pc(s).	EX22	**128.00**
Extension pipe	55540412	D_O 400; 150 cm length; without coupling	1 pc(s).	EX22	**43.50**
Coupling	55510400	D_O 400 for extension pipe	1 pc(s).	EX22	**31.50**
Profile sealing ring	55519400	D_O 400 for extension pipe	1 pc(s).	EX22	**12.60**

NB

Using a KG adapter, short pipe section and 45° bend from the Strabusil accessories, the shaft can also be assembled on site as a 3/150 wye shaft or 4/150 cross shaft.

Alternative (on site) as a 3/150 wye shaft

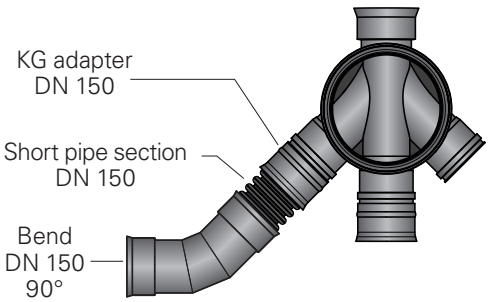

Recommended retail price. Actual design may differ.
Actual dimensions may differ within the scope of production tolerances.

StrabuControl® accessories

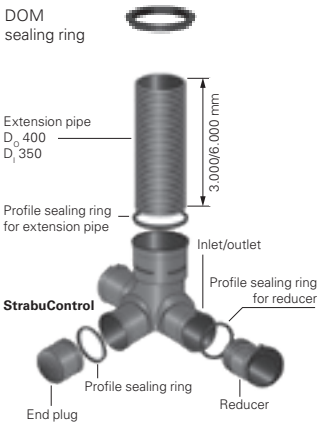

Connection set
DN 150

Product	Cat. no.	Technical data	PU	DG	Price [€/pc.]
Extension pipe	55540400	D_O 400; 3 m total height	1 pc(s).	EX22	**103.00**
	55540406	D_O 400; 6 m total height	1 pc(s).		**169.00**
Coupling	55510400	D_O 400; for extension pipe	1 pc(s).	EX22	**31.50**
Profile sealing ring[1]	55519400	For extension pipe D_O 400	1 pc(s).	EX22	**12.60**
Connection set DN 150 drainage pipe to extension pipe	55573400	For retrofit (on-site) connections of drainage pipes DN 150 to the extension pipe; required drilling Ø 186 mm	1 pc(s).	EX22	**35.70**
DOM sealing ring	55519403	For extension pipe D_O 400; as seal between concrete support ring and extension pipe	1 pc(s).	EX22	**26.25**
End plug	55580250	DN 250	1 pc(s).	EX22	**27.30**
	55580350	DN 350	1 pc(s).		**39.90**
Reducer (for structured-wall pipes)	55513250	DN 250/100	1 pc(s).	EX22	**29.40**
	55512250	DN 250/150	1 pc(s).		**29.40**
	55511250	DN 250/200	1 pc(s).		**29.40**
	55513350	DN 350/150	1 pc(s).		**50.00**
	55512350	DN 350/200	1 pc(s).		**50.00**
	55511350	DN 350/250	1 pc(s).		**50.00**
	55511353	DN 350/300	1 pc(s).		**50.00**
	55512400	DN 400/300	1 pc(s).		**50.00**
	55511400	DN 400/350	1 pc(s).		**50.00**
Reducer (for Strasil)	55513251	DN 250 / Strasil DN 100	1 pc(s).	EX22	**125.00**
	55512251	DN 250 / Strasil DN 150	1 pc(s).		**125.00**
	55511251	DN 250 / Strasil DN 200	1 pc(s).		**125.00**
	55513351	DN 350 / Strasil DN 100	1 pc(s).		**131.30**
	55512351	DN 350 / Strasil DN 150	1 pc(s).		**131.30**
	55511351	DN 350 / Strasil DN 200	1 pc(s).		**131.30**
	55511352	DN 350 / Strasil DN 250	1 pc(s).		**131.30**
Strasil adapter	55510251	DN 250 / Strasil DN 250	1 pc(s).	EX22	**125.00**
Profile sealing ring [1]	55519250	For reducer DN 250	1 pc(s).	EX22	**6.30**
	55519350	For reducer DN 350	1 pc(s).		**12.60**
	55519404	For reducer DN 400	1 pc(s).		**15.80**

[1] For lubricant for watertight coupling joints, see page 57.

Recommended retail price. Actual design may differ.
Actual dimensions may differ within the scope of production tolerances.

StrabuControl® accessories

Temporary construction site cover

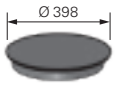

Class A cast iron cover (without ventilation openings) with fixture

Class B and D cast iron cover with and without ventilation openings

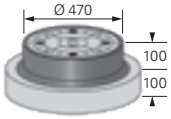

Hook for class D cast iron cover with screwless interlocking mechanism

Class B and D gully gutter

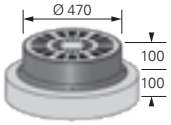

Dirt trap

Product	Cat. no.	Technical data	PU	DG	Price [€/pc.]
Temporary construction site cover	55580400	PP; for extension pipe D_O 400	1 pc(s).	EX22	**14.70**
Class A 15 shaft cover [1]	55585100	Cast iron; cast iron cover with fixture; **without** ventilation openings	1 pc(s).	EX22	**66.70**
Class B 125 shaft cover[1]	55585000	Cast iron; cast iron cover, cast iron frame, concrete support ring; **without** ventilation openings	1 pc(s).	EX22	**218.50**
	5558400099	Cast iron; cast iron cover, cast iron frame, concrete support ring, **with** ventilation openings	1 pc(s).		**218.50**
Class D 400 shaft cover [1]	55585400	Cast iron; cast iron cover, cast iron frame, concrete support ring; **without** ventilation openings, with screwless interlocking mechanism	1 pc(s).	EX22	**257.80**
	55585440	Cast iron; **surface-watertight**; cast iron cover with double screw connection, cast iron frame, concrete support ring; **without** ventilation openings	1 pc(s).		**321.50**
	55584400	Cast iron; cast iron cover, cast iron frame, concrete support ring; **with** ventilation openings, with screwless interlocking mechanism	1 pc(s).		**257.80**
Hook	55586990	Galvanised steel hook (for class D covers with screwless interlocking mechanism)	1 pc(s).	EX22	**78.40**
Gully gutter [1]	55584100	Cast iron; class B 125 (gully gutter, cast iron frame, concrete support ring)	1 pc(s).	EX22	**257.80**
Gully gutter with snap-on locking device [1]	55584500	Cast iron; class D 400; (gully gutter with snap-on locking device, cast iron frame, concrete support ring)	1 pc(s).	EX22	**286.00**
Dirt trap	55591000	For gully gutters and covers with ventilation openings	1 pc(s).	EX22	**34.10**
Sloped concrete support ring	55584009	W x H = 500 x 530 mm	1 pc(s).	EX22	**66.70**
Concrete support ring	55584001	For B/D cast iron cover	1 pc(s).	EX22	**38.90**

[1] V2A screws

Recommended retail price. Actual design may differ.
Actual dimensions may differ within the scope of production tolerances.

StrabuControl® 600

Inside diameter of base body greater than 600 mm.
PE-HD flushing and inspection shaft; colour black. Monolithic base body without weld seams. UV-resistant; weight approx. 15 kg, extremely durable and hard-wearing. Impact and break-resistant. Resistant to oils, acids, bases, greases, gasoline, diesel fuel according to DIN 8075 supplementary sheet 1; with integrated compensating area. Watertight, complies with DIN 4262-1. Connection to standard covers 625 mm and installation in traffic areas possible.

Application: flushing and inspection shaft for StormPipe and Strabusil drainage pipes for all fields of civil engineering and road engineering. Can be directly connected to StormPipe and Strabusil pipes using sealing rings.

Product	Cat. no.	Technical data	PU	DG	Price [€/pc.]
StrabuControl 600	55500602	2/250 180° shaft	1 pc(s).	EX22	**325.00**
	55502602	2/400 180° shaft	1 pc(s).		**342.00**
	55500603	2/250–150 (90°) 1 inlet/1 outlet DN 250 + inlet DN 150 (lateral 90°, in the centre of the base body, not same level)	1 pc(s).		**388.00**
	55502603	2/400–150 (90°) 1 inlet/1 outlet DN 400 + inlet DN 150 (lateral 90°, in the centre of the base body, not same level)	1 pc(s).		**458.00**

StrabuControl® 600 HP

Inside diameter of base body greater than 600 mm.
The piggyback arrangement consists of an AquaPipe DN 200 to DN 350 transport pipe with top Strabusil or StormPipe DN 150 drainage pipe. Clear pipe spacing is 15 cm. Connection to standard covers 625 mm and installation in traffic areas possible.

Application: flushing and inspection shaft for Strabusil and/or StormPipe drainage pipes and AquaPipe transport pipes for all fields of civil engineering and road engineering.

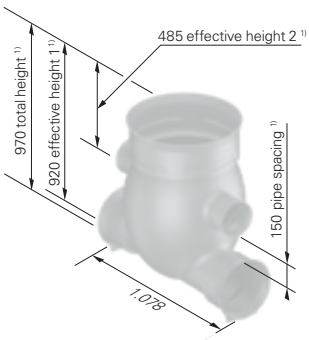

Product	Cat. no.	Technical data	PU	DG	Price [€/pc.]
StrabuControl 600 HP	55501622	2/250 180° shaft	1 pc(s).	EX22	**420.00**
	55501632	2/350 180° shaft [1]	1 pc(s).		**420.00**
	55501612	2/250–150 (90°) 1 inlet/1 outlet DN 250 + inlet DN 150 (lateral 90°, in the centre of the base body, not same level)	1 pc(s).		**483.00**
	55501613	2/350–150 (90°) [1] 1 inlet/1 outlet DN 350 + inlet DN 150 (lateral 90°, in the centre of the base body, not same level)	1 pc(s).		**483.00**

[1] For StrabuControl 600 HP 2/350: total height = 1.050, effective height 1 = 1.000, effective height 2 = 455 and pipe spacing = 150

Recommended retail price. Actual design may differ.
Actual dimensions may differ within the scope of production tolerances.

StrabuControl® 600 V

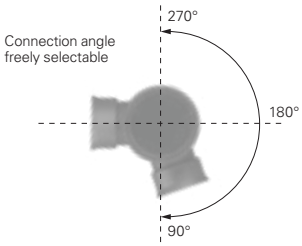

Inside diameter of base body greater than 600 mm.
PE-HD flushing and inspection shaft; with freely selectable connection angle between 90° and 270°; monolithic base body; colour black. UV-resistant, extremely durable and hard-wearing; impact-resistant and break-resistant from –20 °C to +80 °C, resistant to oils, acids, bases, greases, gasoline, diesel fuel according to DIN 8075 supplementary sheet 1. Connection to standard covers 625 mm and installation in traffic areas possible, with integrated compensating area.

Application: flushing and inspection shaft for Strabusil and/or StormPipe drainage pipes for all fields of civil engineering and road engineering.

Product	Cat. no.	Technical data	PU	DG	Price [€/pc.]
StrabuControl 600 V shaft with variable connection angle	55501660	2/100	1 pc(s).	EX22	**761.00**
	55501665	2/150	1 pc(s).		**761.00**
	55501670	2/200	1 pc(s).		**761.00**
	55501675	2/250	1 pc(s).		**761.00**
	55501680	2/300	1 pc(s).		**761.00**
	55501685	2/350	1 pc(s).		**761.00**
	55501690	2/400	1 pc(s).		**761.00**

NB www.fraenkische.com

Delivery will be only effected if form has been fully completed and signed!

StrabuControl® 600 V HP

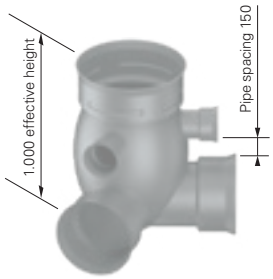

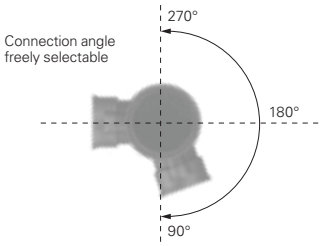

Inside diameter of base body greater than 600 mm.
The piggyback arrangement consists of an AquaPipe DN 200 to DN 350 transport pipe with top Strabusil or StormPipe DN 150 drainage pipe. Clear pipe spacing is 15 cm and the connection angle can be freely selected between 90° and 270°. Connection to standard covers 625 mm and installation in traffic areas possible.

Application: flushing and inspection shaft for Strabusil and/or StormPipe drainage pipes and AquaPipe transport pipes for all fields of civil engineering and road engineering.

Product	Cat. no.	Technical data	PU	DG	Price [€/pc.]
StrabuControl 600 V HP with variable connection angle	55501620	2/200	1 pc(s).	EX22	**829.00**
	55501625	2/250	1 pc(s).		**829.00**
	55501630	2/300	1 pc(s).		**861.00**
	55501635	2/350	1 pc(s).		**861.00**

NB www.fraenkische.com

Delivery will be only effected if form has been fully completed and signed!

Recommended retail price. Actual design may differ.
Actual dimensions may differ within the scope of production tolerances.

StrabuControl® 600 special shaft

Product	Cat. no.	Technical data	PU	DG	Price [€/pc.]
StrabuControl 600 special shaft	55500699	individual	1 pc(s).	EX22	**on request**

NB www.fraenkische.com

Delivery will be only effected if form has been fully completed and signed!

StrabuControl® 600 accessories

Profile sealing ring for extension pipe

Product	Cat. no.	Technical data	PU	DG	Price [€/pc.]
Profile sealing ring [1]	55519250	For reducer DN 250	1 pc(s).	EX22	**6.30**
	55519350	For reducer DN 350	1 pc(s).		**12.60**
	55519404	For reducer DN 400	1 pc(s).		**15.80**
End plug	55580250	DN 250	1 pc(s).	EX22	**27.30**
	55580350	DN 350	1 pc(s).		**39.90**
Reducer (for structured-wall pipes)	55513250	DN 250/100	1 pc(s).	EX22	**29.40**
	55512250	DN 250/150	1 pc(s).		**29.40**
	55511250	DN 250/200	1 pc(s).		**29.40**
	55513350	DN 350/150	1 pc(s).		**50.00**
	55512350	DN 350/200	1 pc(s).		**50.00**
	55511350	DN 350/250	1 pc(s).		**50.00**
	55511353	DN 350/300	1 pc(s).		**50.00**
	55512400	DN 400/300	1 pc(s).		**50.00**
	55511400	DN 400/350	1 pc(s).		**50.00**
Reducer (for Strasil)	55513251	DN 250 / Strasil DN 100	1 pc(s).	EX22	**125.00**
	55512251	DN 250 / Strasil DN 150	1 pc(s).		**125.00**
	55511251	DN 250 / Strasil DN 200	1 pc(s).		**125.00**
	55513351	DN 350 / Strasil DN 100	1 pc(s).		**131.30**
	55512351	DN 350 / Strasil DN 150	1 pc(s).		**131.30**
	55511351	DN 350 / Strasil DN 200	1 pc(s).		**131.30**
	55511352	DN 350 / Strasil DN 250	1 pc(s).		**131.30**
Strasil adapter	55510251	DN 250 / Strasil DN 250	1 pc(s).	EX22	**125.00**

[1] For lubricant for watertight coupling joints, see page 57.

StrabuControl® 600 accessories

DOM sealing ring

Extension pipe

Connection set DN 150

Product	Cat. no.	Technical data	PU	DG	Price [€/pc.]
Extension pipe	55540561	D_O = 600; 1 m length	1 pc(s).	EX22	**63.00**
	55540562	D_O = 600; 2 m length	1 pc(s).		**126.00**
	55540563	D_O = 600; 3 m length	1 pc(s).		**189.00**
	55540566	D_O = 600; 6 m length	1 pc(s).		**378.00**
Profile sealing ring for extension pipe [1]	55519561	Seal between extension pipe and shaft body	1 pc(s).	EX22	**18.90**
Coupling	55510660	D_O 600; for extension pipe	1 pc(s).	EX22	**59.00**
DOM sealing ring	55519565	For extension pipe D_O 600; as seal between concrete support ring and extension pipe	1 pc(s).	EX22	**32.60**
Connection set DN 150 drainage pipe to extension pipe	55573600	For retrofit (on-site) connections of drainage pipes DN 150 to the extension pipe; required drilling Ø 186 mm	1 pc(s).	EX22	**35.70**
Concrete adapter ring	55584066	Connection of standard gully gutter 500 x 500 mm, with 625 mm standard concrete support ring (DIN 4034)	1 pc(s).	EX22	**147.00**
Temporary construction site cover	55580500	Cover (end plug) for extension pipe D_O 600 for the construction period	1 pc(s).	EX22	**24.00**
Support ring acc. to DIN 4034, Part 1	–	60/80/100 mm high	–	–	**to be supplied on site**
Standard covers acc. to DIN EN 124	–	Class B or D CW 610	–	–	**to be supplied on site**
Gully gutter acc. to DIN EN 124 with bucket handle and stretched bucket (acc. to DIN 4052-A4)	–	Classes B, C or D CW 610	–	–	**to be supplied on site**

[1] For lubricant for watertight coupling joints, see page 62.

Recommended retail price. Actual design may differ.
Actual dimensions may differ within the scope of production tolerances.

Strasil® – drainage pipe SN 4 (PVC-U)

SLW/HGV 60

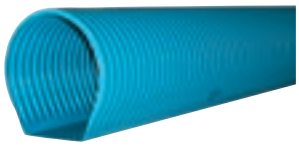

Locally perforated and multi-purpose PVC-U pipe according to DIN 4262-1 type C1 (formerly form F), total perforation area greater than or equal to 50 cm²/m, 1.2 mm ± 0.4 mm perforation width. Can be used in compliance with REwS (Directives relating to road drainage), SN 4 according to DIN EN ISO 9969.

Application: as drainage pipe for reliable drainage in civil engineering, road engineering and industrial engineering.

Strasil® LP

Locally perforated pipe, crossways corrugation, crossways offset perforation, tunnel-shaped, with smooth invert and coupling; colour blue.

LP locally perforated pipes

Product	Cat. no.	Technical data			PU	Price [€/m]
Strasil LP 6 m length	55200100	DN/ID 100	D_I = 99	D_O = 110	600 m/pal.	**5.15**
	55200150	DN/ID 150	D_I = 147	D_O = 160	276 m/pal.	**10.05**
	55200200	DN/ID 200	D_I = 196	D_O = 217	150 m/pal.	**22.55**

Strasil® MP

Multi-purpose pipe with watertight coupling connection; sealing rings included; colour blue.

MP multi-purpose pipes

Product	Cat. no.	Technical data			PU	Price [€/m]
Strasil MP 6 m length	55210200	DN/ID 200	D_I = 196	D_O = 217	150 m/pal.	**24.80**
	55210250	DN/ID 250	D_I = 238	D_O = 262	96 m/pal.	**34.10**

Two sealing rings per pipe are included in the scope of delivery.

Strasil® accessories

Product	Cat. no.	Technical data	PU	DG	Price [€/pc.]
Coupling	55710100	DN 100	1 pc(s).	EX04	**6.15**
	55710150	DN 150	1 pc(s).		**10.10**
	55710200	DN 200	1 pc(s).		**32.10**
	55710250	DN 250	1 pc(s).		**36.00**
Profile sealing ring [1]	55719200	DN 200	1 pc(s).	EX04	**10.70**
	55719250	DN 250	1 pc(s).		**13.45**
30° bend	55722100	DN 100	1 pc(s).	EX04	**31.50**
	55722150	DN 150	1 pc(s).		**49.50**
45° bend	55721100	DN 100	1 pc(s).	EX04	**16.80**
	55721150	DN 150	1 pc(s).		**27.25**
	55721200	DN 200	1 pc(s).		**109.80**
	55721250	DN 250	1 pc(s).		**492.60**
90° bend	55720100	DN 100	1 pc(s).	EX04	**16.30**
	55720150	DN 150	1 pc(s).		**26.90**
	55720200	DN 200	1 pc(s).		**99.20**
	55720250	DN 250	1 pc(s).		**518.50**
End plug	55780100	DN 100	1 pc(s).	EX04	**12.30**
End cap	55780150	DN 150	1 pc(s).	EX04	**27.00**
	55780200	DN 200	1 pc(s).		**161.00**
	55780250	DN 250	1 pc(s).		**247.00**
Shaft lining/ coupling	55789100	DN 100	1 pc(s).	EX04	**6.00**
	55789150	DN 150	1 pc(s).		**9.70**
Shaft lining	55789200	DN 200	1 pc(s).	EX04	**30.90**
	55789250	DN 250	1 pc(s).		**34.65**

Technical consultation required before installation

[1] For lubricant for watertight coupling joints, see page 62.

Strasil® accessories

Product	Cat. no.	Technical data	PU	DG	Price [€/pc.]
Outlet with flap valve	55779100	DN 100; 1 m length	1 pc(s).	EX04	**82.75**
	55779150	DN 150; 1 m length	1 pc(s).		**117.10**
	55779200	DN 200; 1 m length	1 pc(s).		**205.80**
	5577925099	DN 250; 1 m length	1 pc(s).		**524.70**

KG adapter with KG coupling (KG spigot can be inserted)	55760100	DN 100/100	1 pc(s).	EX04	**13.45**
	55760150	DN 150/150	1 pc(s).		**21.00**
	55760200	DN 200/200	1 pc(s).		**69.60**

KG adapter with KG spigot (push-fit KG coupling)	55761100	DN 100/100	1 pc(s).	EX04	**15.30**
	55761150	DN 150/150	1 pc(s).		**25.60**
	55761200	DN 200/200	1 pc(s).		**85.15**
	55761250	DN 250/250	1 pc(s).		**345.70**

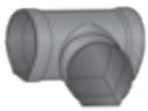

Tee	55730100	DN 100	1 pc(s).	EX04	**25.20**
	55730150	DN 150	1 pc(s).		**42.80**
	55730200	DN 200	1 pc(s).		**113.60**
	55730250	DN 250	1 pc(s).		**622.20**

Tee with reducer	55731150	DN 150/100	1 pc(s).	EX04	**80.20**
	55731200	DN 200/150	1 pc(s).		**198.55**
	55732200	DN 200/100	1 pc(s).		**129.40**
	55732250	DN 250/150	1 pc(s).		**855.60**
	55733250	DN 250/100	1 pc(s).		**855.60**

Recommended retail price. Actual design may differ.
Actual dimensions may differ within the scope of production tolerances.

Strasil® accessories

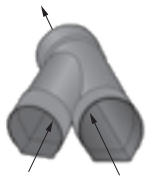

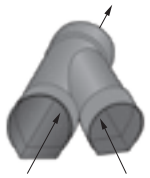

Product	Cat. no.	Technical data	PU	DG	Price [€/pc.]
45° left-hand wye	55740100	DN 100	1 pc(s).	EX04	**66.90**
	55740150	DN 150	1 pc(s).		**143.30**
	55740200	DN 200	1 pc(s).		**251.70**
	55740250	DN 250	1 pc(s).		**980.70**
45° right-hand wye	55750100	DN 100	1 pc(s).	EX04	**66.90**
	55750150	DN 150	1 pc(s).		**143.30**
	55750200	DN 200	1 pc(s).		**251.70**
	55750250	DN 250	1 pc(s).		**980.70**
45° wye with left-hand reducer	55741150	DN 150/100	1 pc(s).	EX04	**104.50**
	55741200	DN 200/150	1 pc(s).		**193.00**
	55742200	DN 200/100	1 pc(s).		**175.70**
	55741250	DN 250/200	1 pc(s).		**1,400.00**
	55742250	DN 250/150	1 pc(s).		**1,135.80**
	55743250	DN 250/100	1 pc(s).		**1,160.00**
45° wye with right-hand reducer	55751150	DN 150/100	1 pc(s).	EX04	**104.50**
	55751200	DN 200/150	1 pc(s).		**193.00**
	55752200	DN 200/100	1 pc(s).		**175.70**
	55752250	DN 250/150	1 pc(s).		**1,135.80**
	55753250	DN 250/100	1 pc(s).		**1,160.00**
Reducer	55711150	DN 150/100	1 pc(s).	EX04	**271.00**
	55711200	DN 200/150	1 pc(s).		**284.00**
	55712200	DN 200/100	1 pc(s).		**271.00**
	55712250	DN 250/150	1 pc(s).		**320.00**

Recommended retail price. Actual design may differ.
Actual dimensions may differ within the scope of production tolerances.

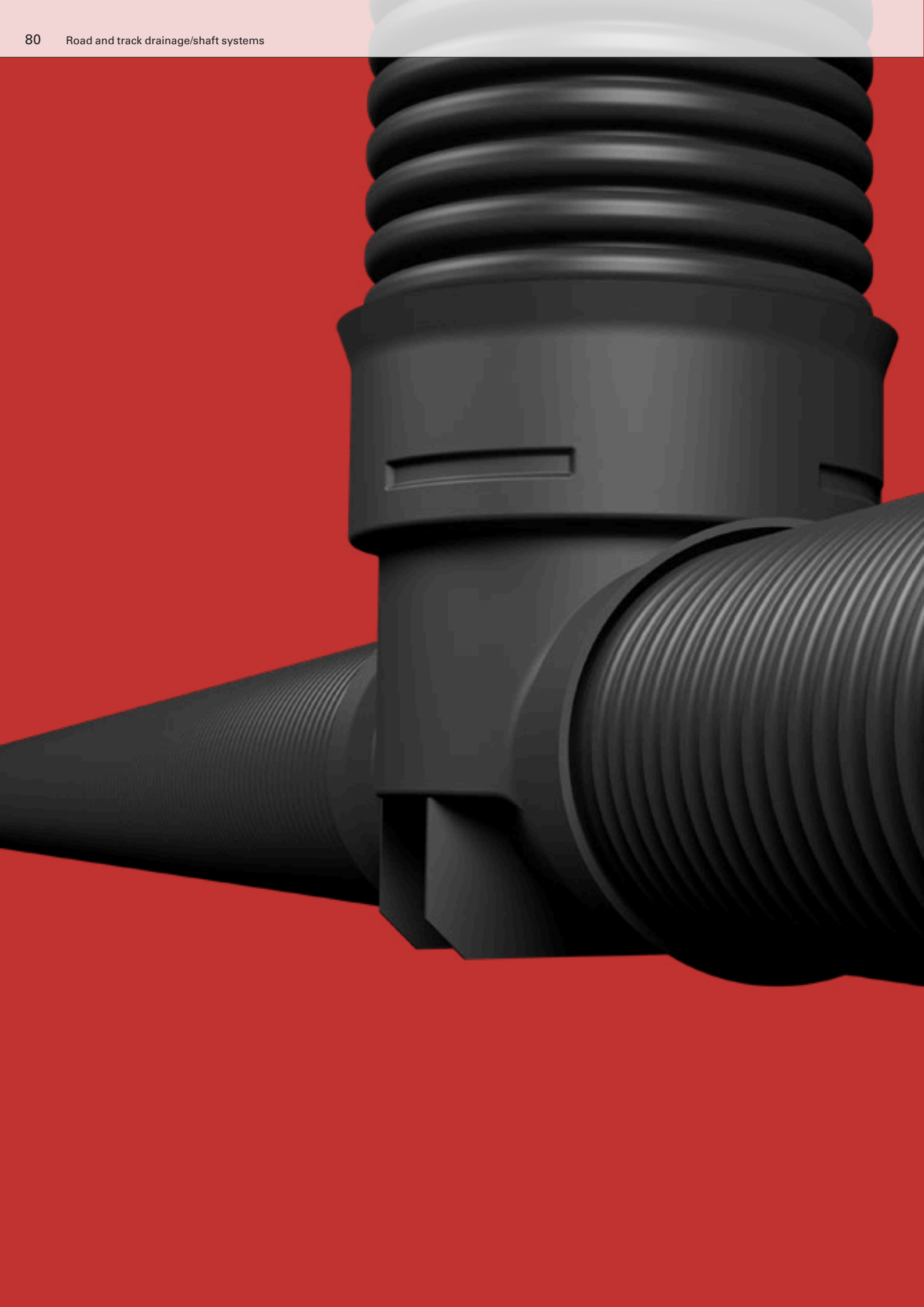

Railway track drainage

Drainage pipes must withstand extreme stresses in the drainage of railway tracks. Using high-quality polypropylene and optimised profile geometry, FRÄNKISCHE offers an extremely hard-wearing drainage pipe for track drainage.

The RailPipe drainage pipe is the first structured-wall pipe to meet all the standards and requirements of Deutsche Bahn AG and can therefore be used for all pressure ranges of the track system.

www.fraenkische.com/track-drainage

RailPipe® drainage pipe SN 16

Locally perforated (LP), totally perforated (TP) and multi-purpose (MP) SN 16 PP pipe in proven structured-wall design (corrugated outside, smooth inside), according to DIN 4262-1, type R2 and DIN 13476. Complies with the special requirements of DBS 918064 (last modified 08/2022) of Deutsche Bahn AG. Features manufacturer-related product qualification (HPQ) for all pressure ranges.

Application: specifically designed for track drainage (for all pressure ranges) or for applications with extreme requirements.

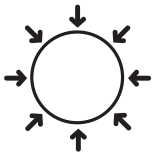

Product	Cat. no.	Technical data		PU	Price [€/m]
RailPipe – TP (totally perforated pipe) 6 m length	54401150	DN/ID 150	D_O = 175	252 m/pal.	on request
	54401200	DN/ID 200	D_O = 235	138 m/pal.	
	54401250	DN/ID 250	D_O = 294	84 m/pal.	
	54401300	DN/ID 300	D_O = 347	54 m/pal.	
	54401400	DN/ID 400	D_O = 458	30 m/pal.	
	54401500	DN/ID 500	D_O = 570	24 m/pal.	
	54401600	DN/ID 600	D_O = 682	18 m/pal.	

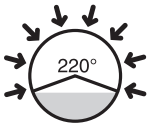

RailPipe – LP (locally perforated pipe) 6 m length	54411150	DN/ID 150	D_O = 175	252 m/pal.	on request
	54411200	DN/ID 200	D_O = 235	138 m/pal.	
	54411250	DN/ID 250	D_O = 294	84 m/pal.	
	54411300	DN/ID 300	D_O = 347	54 m/pal.	
	54411400	DN/ID 400	D_O = 458	30 m/pal.	
	54411500	DN/ID 500	D_O = 570	24 m/pal.	
	54411600	DN/ID 600	D_O = 682	18 m/pal.	

RailPipe – MP (multi-purpose pipe) 6 m length	54421200	DN/ID 200	D_O = 235	138 m/pal.	on request
	54421250	DN/ID 250	D_O = 294	84 m/pal.	
	54421300	DN/ID 300	D_O = 347	54 m/pal.	
	54421400	DN/ID 400	D_O = 458	30 m/pal.	
	54421500	DN/ID 500	D_O = 570	24 m/pal.	
	54421600	DN/ID 600	D_O = 682	18 m/pal.	

RailPipe – UP (unperforated) 6 m length	54430150	DN/ID 150	D_O = 175	252 m/pal.	on request
	54430200	DN/ID 200	D_O = 235	138 m/pal.	
	54430250	DN/ID 250	D_O = 294	84 m/pal.	
	54430300	DN/ID 300	D_O = 347	54 m/pal.	
	54430400	DN/ID 400	D_O = 458	30 m/pal.	
	54430500	DN/ID 500	D_O = 570	24 m/pal.	
	54430600	DN/ID 600	D_O = 682	18 m/pal.	

Manufacturer-related product qualification HPQ internal pressure range

DBS 918064 Last modified 08/2022

Manufacturer-related product qualification HPQ outside/external pressure range

Proof of jetting resistance

NB

According to DBS 918064 (last modified 08/2022), the manufacturer-related product qualification for the internal pressure range will replace the EBA certification.

RailPipe® accessories

Product	Cat. no.	Technical data	PU	Price [€/m]
RailPipe coupling 2 sealing rings included	54910150	DN 150	1 pc(s).	on request
	54910200	DN 200	1 pc(s).	
	54910250	DN 250	1 pc(s).	
	54910300	DN 300	1 pc(s).	
	54910400	DN 400	1 pc(s).	
	54910500	DN 500	1 pc(s).	
	54910600	DN 600	1 pc(s).	

Other fittings available on request.

Recommended retail price. Actual design may differ.
Actual dimensions may differ within the scope of production tolerances.

RailControl flushing and inspection shaft

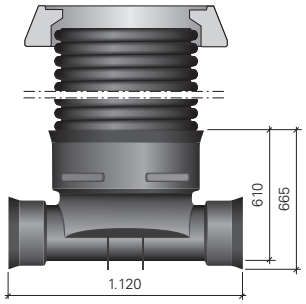

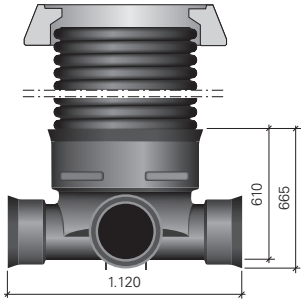

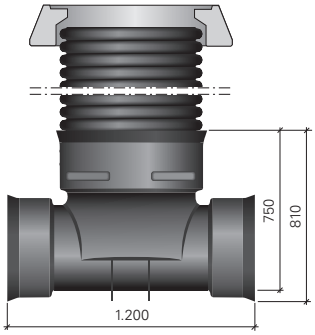

PE/PP flushing and inspection shaft; monolithic shaft bottom with raceway; colour black, inside of extension pipe red; 180° shaft as an option 2/250 and 2/400; 90° wye shaft 3/250; complies with the special requirements of DBS 918064 (last modified 08/2022) of Deutsche Bahn AG. Features manufacturer-related product qualification (HPQ) for all pressure ranges.

Application: specifically designed for track drainage (for all pressure ranges) or for applications with extreme requirements.

Product	Cat. no.	Technical data	PU	Price [€/m]
RailControl 2/250 (set)	55505612	180° shaft; 1 inlet/1 outlet DN 250; consisting of shaft bottom, extension pipe DN/ID 600, 1.20 m length, sealing ring DN 600 and BARD ring	1 pc(s).	**on request**
RailControl 3/250 (set)	55505613	3/250 90° wye shaft; DN 250; consisting of shaft bottom, extension pipe DN/ID 600 1.20 m length, sealing ring DN 600 and BARD ring	1 pc(s).	**on request**
RailControl 2/400 (set)	55505652	180° shaft; 1 inlet / 1 outlet DN 400; consisting of shaft bottom, extension pipe DN/ID 600, 1.20 m length, sealing ring DN 600 and BARD ring	1 pc(s).	**on request**
Extension pipe	55545601	DN/ID 600; 1.2 m length	1 pc(s).	**on request**
BARD ring	55585025	Class D concrete support ring	1 pc(s).	**on request**
Profile sealing ring	55519254	For reducer DN 250	1 pc(s).	**on request**
	55519604	For extension pipe DN 600	1 pc(s).	
	55519444	For reducer DN 400/DN 300	1 pc(s).	
End plug	55580254	DN 250	1 pc(s).	**on request**
Reducer	55512255	DN 250/DN 150	1 pc(s).	**on request**
	55511255	DN 250/DN 200	1 pc(s).	
	55512405	DN 400/DN 300	1 pc(s).	
Support ring acc. to DIN 4034, Part 1		60/80/100 mm high	1 pc(s).	**on request**
Standard covers acc. to DIN EN 124		Classes A, B, C or D CW 610	1 pc(s).	**on request**
Gully gutter acc. to DIN EN 124 with bucket handle and stretched bucket (acc. to DIN 4052-A4)		Classes A, B, C or D CW 610	1 pc(s).	**on request**

Manufacturer-related product qualification HPQ internal pressure range

DBS 918064 Last modified 08/2022

Manufacturer-related product qualification HPQ outside/external pressure range

Proof of jetting resistance

NB

According to DBS 918064 (last modified 08/2022), the manufacturer-related product qualification for the internal pressure range will replace the EBA certification.

Recommended retail price. Actual design may differ.
Actual dimensions may differ within the scope of production tolerances.

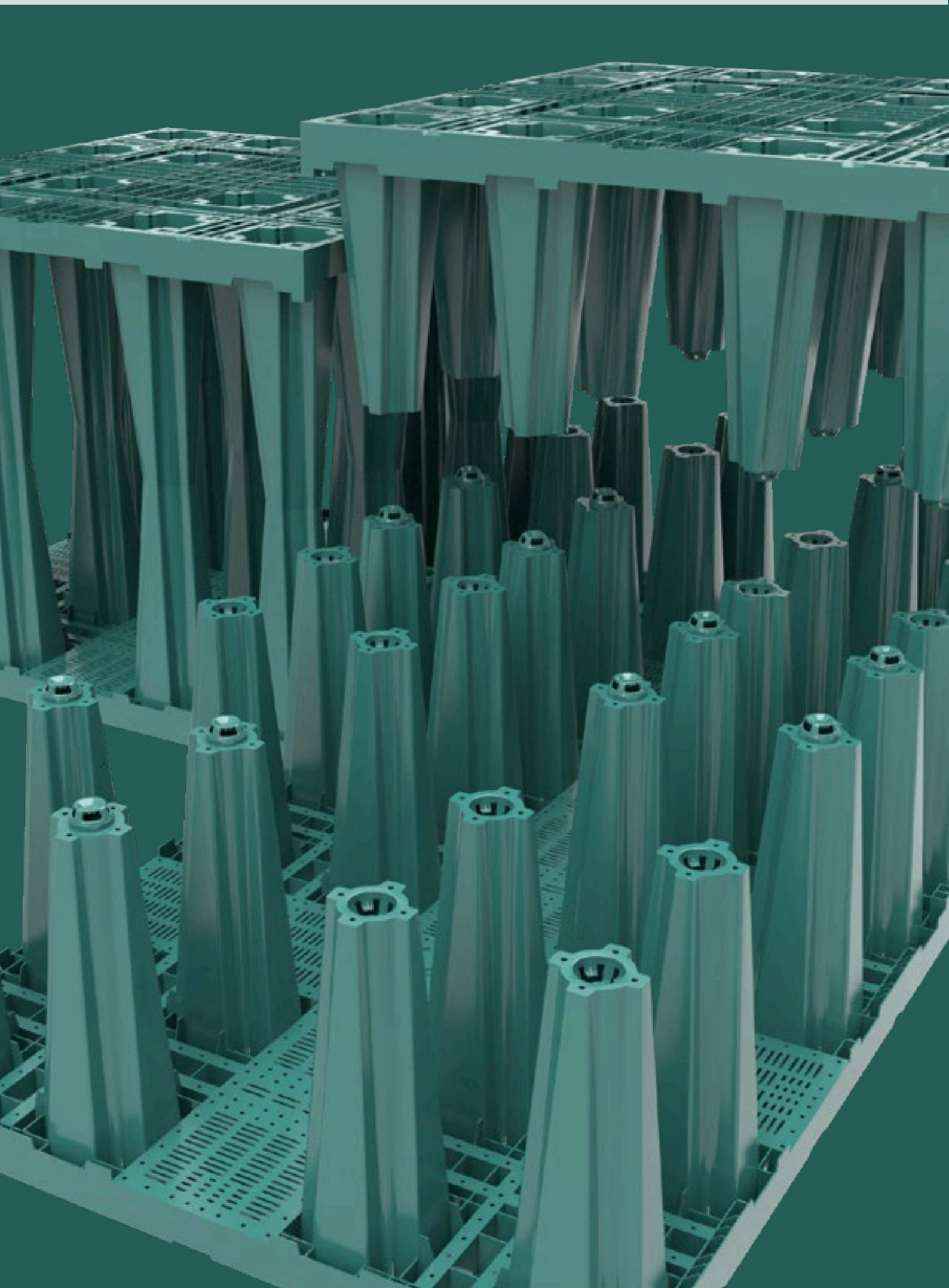

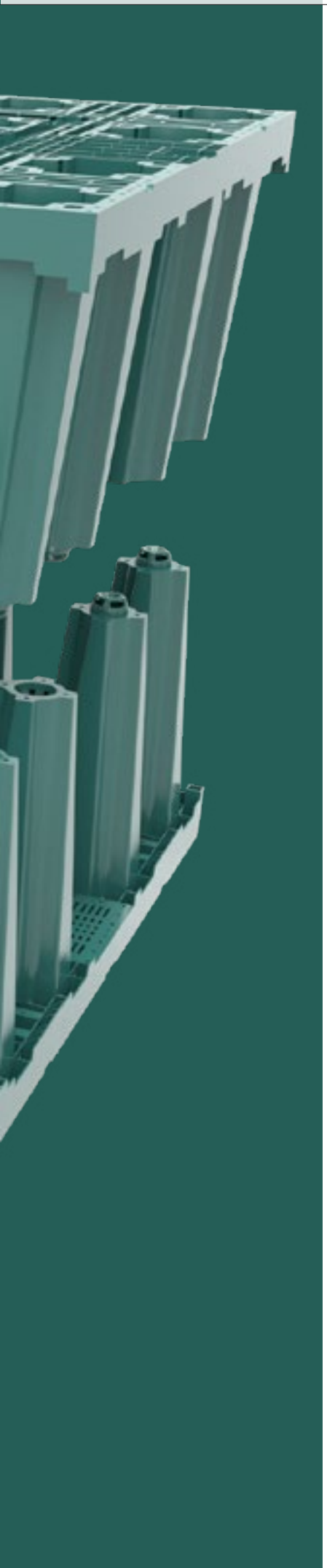

Stormwater management

Our challenge begins where rain falls on roads, squares, roofs, airports, stadiums or other sealed areas: re-establishing the natural water cycle where it has been interrupted and returning the water to natural storage areas.

At FRÄNKISCHE, we have been working in urban and road drainage for more than 30 years. Stormwater management has been gaining more and more importance in these fields and has become the benchmark for an eco-friendly performance.
We know today that every challenge related to stormwater requires cooperation, systematic thinking and fast action.

For decades, our products have been setting the trends in the industry. They uniquely combine economy and ecology. This is how we manage to return stormwater to the natural cycle without causing flood damage in cities or municipalities.

www.fraenkische.com/stormwater-management

Rigofill® ST-Standard

SLW 60/HGV 60

Rigofill ST-Standard is a highly durable storage/infiltration system with a base of 800 x 800 mm and a height of 660 mm (full blocks) and 350 mm (half blocks).

The polypropylene full block consists of two half elements to be installed on site and has a void ratio of greater than 96 %. With a gross volume of 422 litres, this results in a net storage volume of 406 l/s. Water can flow through the module three-dimensionally almost without any obstacles. Rigofill ST-Standard allows for virtually any size and geometry of the systems.

The cross-shaped inspection tunnel in the storage/infiltration module has been designed for the use of automotive dollies. This enables the overall inspection of the effective drainage surface and the entire system volume with all statically relevant bearing-type fixtures.

In combination with the QuadroControl ST-Standard system shaft, the storage/infiltration system has been designed for professional final acceptance inspection and repeated inspection. The shaft allows comfortable access to the inspection tunnel from above ground. High-performance inspection and flushing technology can easily be inserted into the inspection tunnel. Installation under traffic areas (SLW 60/HGV 60) possible.

Recommended accessories: Rigofill ST-S accessories (see page 87) and QuadroControl ST-S (see page 88).

Installation video

Application: construction of gravel-free swales for the infiltration, retention and storage of stormwater runoff in combination with the RigoFlor special geotextile lining, QuadroControl ST-S inspection shafts and additional accessories. Please observe our installation manual.

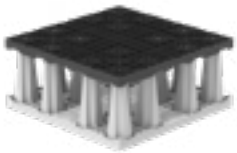

Product	Cat. no.	Technical data	PU	Price [€/pc.]
Rigofill ST-S base element	51594400	W x D x H = 800 x 800 x 330 mm	68 pc(s)./ pal.	**52.00**
NB The full block consists of two base elements.				
Rigofill ST-S Roof slab	51594401	W x D x H = 800 x 800 x 50 mm	34 pc(s)./ pal.*	**14.20**
NB The half block consists of one roof slab and one base element.				

Country-specific approvals:

EN

EN 17152-1

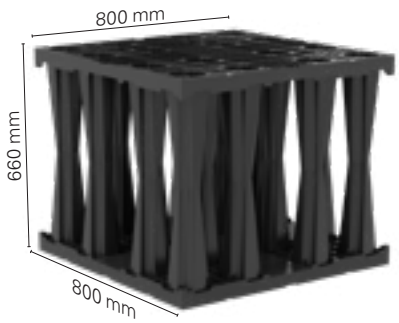

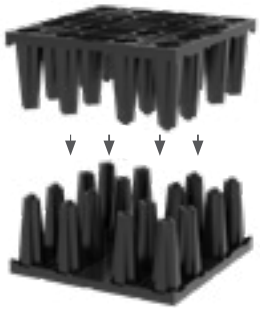

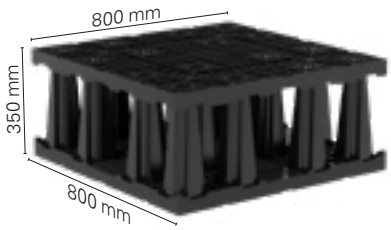

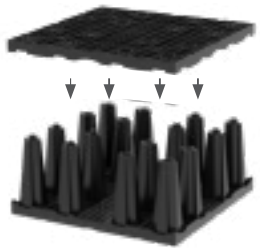

Recommended retail price. Actual design may differ.
Actual dimensions may differ within the scope of production tolerances.

Rigofill® ST-Standard accessories

- The sidewall grids serve as an external boundary. They can be assembled easily using snap connections. The sidewall grids are suited for lateral connections of solid wall pipes DN 110, 125, 160, 200, 225, 250, 315, 400 and 500. The sidewall grids for the half block are suited for lateral connections of solid wall pipes DN 110, 125, 160, 200, 225 and 250.
- The supporting grid serves as an additional supporting element which can be installed between two half base elements. It increases the horizontal resistance of a full block by over 60 %. It is used in watertight systems with groundwater outside the system or in multiple-layer storage/infiltration systems with great installation depths.
- The adapter for Rigofill ST-S provides an inlet connection with an optimised flow design with diffuser effect for solid wall pipes DN/OD 315, 400 and 500. It can be connected to Rigofill ST-S easily and quickly thanks to the snap connection.
- Connectors secure Rigofill ST-S during installation.
- Mechanically bonded and thermally treated polypropylene (PP) geotextile with its unsurpassed combination of excellent water permeability, great thickness and optimum opening width ensures long-term filter functionality. Geotextile class 3. CE-certified according to DIN EN 13252.

Sidewall grid full block

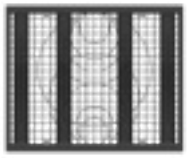

Sidewall grid half block

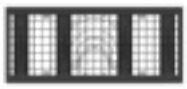

Supporting grid

Adapter

Ventilation unit

Single-layer connector

Multiple-layer connector

CE 0799-CPR-55

RigoFlor

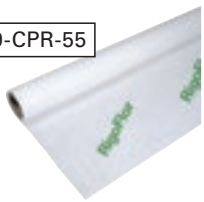

Product	Cat. no.	Technical data		PU	DG	Price [€/pc.]
Rigofill ST-S sidewall grid full block	51594485	W x D x H = 800 x 30 x 660 mm Connections: DN 110, 125, 160, 200, 225, 250, 315, 400, 500		55 pc(s)./pal.	EX40	**11.70**
Rigofill ST-S sidewall grid half block	51594486	W x D x H = 800 x 30 x 350 mm Connections: DN 110, 125, 160, 200, 225, 250		117 pc(s)./pal.	EX40	**7.30**
Rigofill ST-S sidewall grid, short full block	51594488	W x D x H = 770 x 30 x 660 mm Connections: DN 110, 125, 160, 200, 225, 250, 315, 400, 500		55 pc(s)./pal.	EX40	**13.10**
Rigofill ST- S sidewall grid, short half block	51594489	W x D x H = 770 x 30 x 350 mm Connections: DN 110, 125, 160, 200, 225, 250		117 pc(s)./pal.	EX40	**9.10**
Rigofill ST-S supporting grid	51594490	For Rigofill ST-S full block W x D x H = 800 x 800 x 40 mm		34 pc(s)./pal.	EX40	**19.30**
Rigofill ST-S adapter full block	51594487	W x H = 800 x 660 mm Connections: DN 315, 400, 500		12 pc(s)./pal.	EX40	**235.00**
Ventilation unit	51990110	Connection panel, structured-wall pipe DN 110 (L = 3.0 m), ventilation cowl and profile sealing ring DN 110		1 pc(s).	EX40	**147.00**
Single-layer connector (suitable for single-layer installations)	51594301	Requirement for single-row installation	1 pc(s). per module	100 pc(s).	EX40	**0.90**
		Requirement for multiple-row installation	2 pc(s). per module			
Multiple-layer connector (for multiple-layer installations)	51594302	Requirement for two-layer installation	1 pc(s). per module	100 pc(s).	EX40	**0.90**
		Requirement for three-layer installation	1.3 pc(s). per module (factor 1.3)			

Please always order block connectors separately – the above data is provided for information only.

RigoFlor	51695000	200 g/m²; 4 m width; 50 m length	200 m²	EX40	**2.45**
	51695002	200 g/m²; 4 m width; 25 m length	100 m²		**2.45**
	51695003	200 g/m²; 4 m width; 10 m length	40 m²		**2.85**

Recommended retail price. Actual design may differ.
Actual dimensions may differ within the scope of production tolerances.

Quadro®Control ST-Standard – system shaft for Rigofill® ST-S

QuadroControl ST-Standard is a polypropylene (PP) inspection shaft which can be integrated into the storage/infiltration system. It is square with a base of 800 x 800 mm and can be used anywhere in the layout. Its height results from the number of layers of the connected storage/infiltration system. The shaft allows comfortable access to the inspection tunnel from above ground. High-performance inspection and flushing technology can easily be inserted into the inspection tunnel. The shaft is integrated into the storage/infiltration system and grows layer by layer as construction progresses. QuadroControl ST-Standard is delivered with all required components and will be assembled on site.

Recommended accessories: QuadroControl ST-S shaft accessories (see page 89) and accessories for Rigofill ST-S (see page 87).

Application: multifunctional system shaft for Rigofill ST-S storage/infiltration systems, can be integrated anywhere in the modular block type structure, for inlet connection and ventilation as well as for inspection and maintenance of the system. Please observe our installation manual.

1/2-layer

1 1/2-layer

Supporting grid shaft

Product	Cat. no.	Technical data	PU	DG	Price [€/pc.]
QuadroControl ST-S 1/2-layer	51594405	WxDxH = 800 x 800 x 350 mm [1] Couple cone and one profile sealing ring included.	1 pc(s).	EX40	**215.00**
QuadroControl ST-S 1-layer	51594410	WxDxH = 800 x 800 x 660 mm [1] Couple cone and one profile sealing ring included.	1 pc(s).	EX40	**308.00**
QuadroControl ST-S 1 1/2-layer	51594415	WxDxH = 800x800x1,010 mm [1] Couple cone and one profile sealing ring included.	1 pc(s).	EX40	**397.00**
QuadroControl ST-S 2-layer	51594420	WxDxH = 800 x 800 x 1,320 mm [1] Couple cone and one profile sealing ring included.	1 pc(s).	EX40	**500.00**
QuadroControl ST-S 2 1/2-layer	51594425	WxDxH = 800x800x1,670 mm [1] Couple cone and one profile sealing ring included.	1 pc(s).	EX40	**577.00**
QuadroControl ST-S 3-layer	51594430	WxDxH = 800 x 800 x 1,980 mm [1] Couple cone and one profile sealing ring included.	1 pc(s).	EX40	**638.00**
QuadroControl ST-S supporting grid	51594491	W x D x H = 800 x 800 x 40 mm	1 pc(s).	EX40	**42.00**

[1] Plus 130 mm couple cone total height

NB Other/taller shafts available on request.

QuadroControl ST-S structure

The shaft cone is the transition to the extension pipe. The length of the extension pipe is chosen depending on the installation depth.

The shaft is integrated into the storage/infiltration system and grows layer by layer as construction progresses.

The shaft components are stackable, and delivery includes the cone with all required components.

Inlet detail

Number of layers	Height "H"
1/2	350 mm
1	660 mm
1 1/2	1,010 mm
2	1,320 mm
2 1/2	1,670 mm
3	1,980 mm
3 1/2	2,330 mm
4	2,640 mm

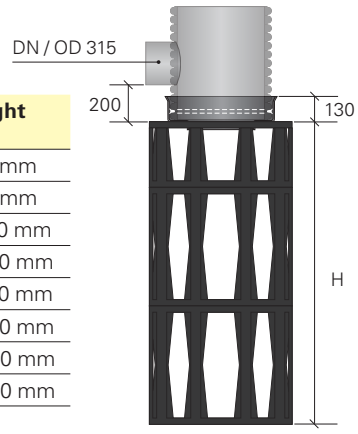

Recommended retail price. Actual design may differ.
Actual dimensions may differ within the scope of production tolerances.

Shaft accessories D_0 600

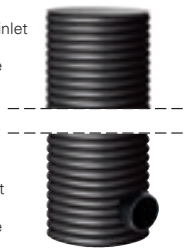

Extension pipe D_0 600 without inlet incl. temporary construction site cover

Extension pipe D_0 600 with inlet incl. temporary construction site cover

Profile sealing ring

Coupling

Profile sealing ring

DOM sealing ring

Sediment trap D_0 600

Filter set D_0 600

Geotextile filter bag D_0 600

Product	Cat. no.	Technical data	PU	DG	Price [€/pc.]
Extension pipe [1] without inlet	51550551	D_0 = 600; 1 m length	1 pc(s).	EX40	**121.00**
	51550552	D_0 = 600; 2 m length	1 pc(s).		**237.00**
	51550553	D_0 = 600; 3 m length	1 pc(s).		**336.00**
	51550556	D_0 = 600; 6 m length	1 pc(s).		**630.00**
Extension pipe [1] with inlet DN/OD 200	51550581	D_0 = 600; 1 m length	1 pc(s).	EX40	**231.00**
	51550582	D_0 = 600; 2 m length	1 pc(s).		**315.00**
	51550583	D_0 = 600; 3 m length	1 pc(s).		**425.00**
Extension pipe [1] with inlet DN/OD 315	51550591	D_0 = 600; 1 m length	1 pc(s).	EX40	**263.00**
	51550592	D_0 = 600; 2 m length	1 pc(s).		**415.00**
	51550593	D_0 = 600; 3 m length	1 pc(s).		**515.00**
Coupling	51910500	For extension pipe D_0 600	1 pc(s).	EX40	**63.00**
Profile sealing ring[2]	51919501	For extension pipe D_0 600	1 pc(s).	EX40	**19.85**
DOM sealing ring	51919505	For extension pipe D_0 600; as seal between concrete support ring and extension pipe	1 pc(s).	EX40	**36.75**
Sediment trap D_0 600	51991095	Suitable for installation under CW 610 shaft covers	1 pc(s).	EX40	**104.80**
Filter set D_0 600	51991002	Swale emergency overflow for shafts D_0 600 comprising dirt trap and geotextile filter bag	1 pc(s).	EX40	**297.40**
Geotextile filter bag D_0 600	51991099	Replacement part of the filter set D_0 600	1 pc(s).	EX40	**81.00**

Shaft covers acc. to DIN EN 124	–	Class B or D, CW 610	–	EX40	**to be supplied on site**
Gully gutter acc. to DIN EN 124	–	Class B, C or D CW 610	–	EX40	
Support ring acc. to DIN 4034, Part 1	–	Height: 100 mm	–	EX40	

[1] Pre-mounted temporary construction site cover included.

[2] For lubricant for watertight coupling joints, see page 62.

QuadroControl ST-A structure

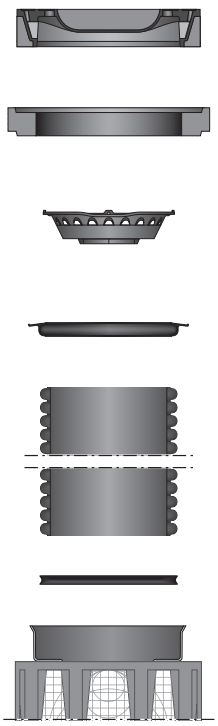

Structure of swale emergency overflow

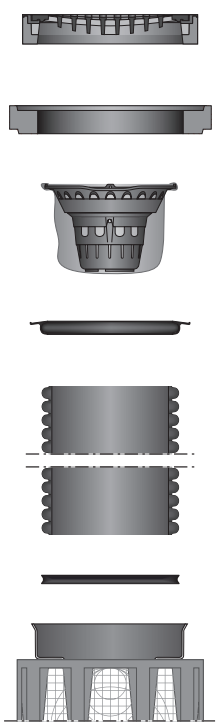

Recommended retail price. Actual design may differ.
Actual dimensions may differ within the scope of production tolerances.

Rigofill® ST-Advanced

SLW 60/HGV 60

Installation video

Rigofill ST-Advanced is a highly durable storage/infiltration system with a base of 800 x 800 mm and a height of 660 mm (full blocks) and 350 mm (half blocks).

The polypropylene full block consists of two half elements to be installed on site and has a void ratio of greater than 96 %. With a gross volume of 422 litres, this results in a net storage volume of 406 l/s. Water can flow through the module three-dimensionally almost without any obstacles. Rigofill ST allows for virtually any size and geometry of the systems.

The cross-shaped inspection tunnel in the storage/infiltration module has been designed for the use of automotive dollies. This enables the overall inspection of the effective drainage surface and the entire system volume with all statically relevant bearing-type fixtures.

In combination with the QuadroControl ST-Advanced system shaft, the storage/infiltration system has been designed for professional final acceptance inspection and repeated inspection. The shaft allows comfortable access to the inspection tunnel from above ground. High-performance inspection and flushing technology can easily be inserted into the inspection tunnel. Installation under traffic areas (SLW 60/HGV 60) and in large depths is possible.

Recommended accessories:

Rigofill ST-A accessories (see page 91) and QuadroControl ST-A (see page 92).

Application: construction of gravel-free swales for the infiltration, retention and storage of stormwater runoff in combination with the RigoFlor special geotextile lining, QuadroControl ST-A inspection shafts and additional accessories. Please observe our installation manual.

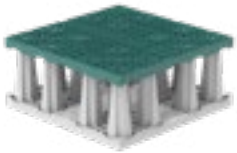

Product	Cat. no.	Technical data	PU	Price [€/pc.]
Rigofill ST-A base element	51594500	W x D x H = 800 x 800 x 330 mm	68 pc(s)./pal.	**57.80**
NB The full block consists of two base elements				
Rigofill ST-A roof slab	51594501	W x D x H = 800 x 800 x 50 mm	34 pc(s)./ pal.*	**15.90**
NB The half block consists of one roof slab and one base element.				

Country-specific approvals:

EN

EN 17152-1

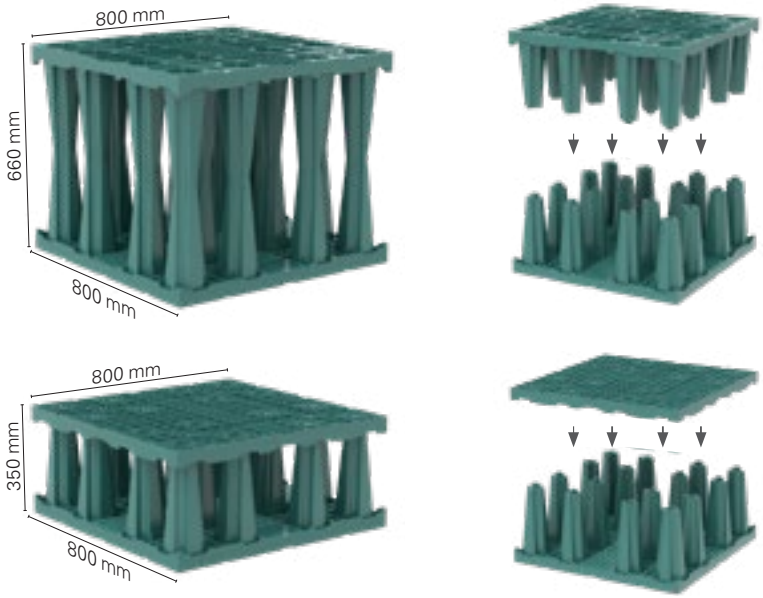

Recommended retail price. Actual design may differ.
Actual dimensions may differ within the scope of production tolerances.

Rigofill® ST-Advanced accessories

- The sidewall grids serve as an external boundary. They can be assembled easily using snap connections. The sidewall grids are suited for lateral connections of solid wall pipes DN 110, 125, 160, 200, 225, 250, 315, 400 and 500. The sidewall grids for the half block are suited for lateral connections of solid wall pipes DN 110, 125, 160, 200, 225 and 250.
- The supporting grid serves as an additional supporting element which can be installed between two half base elements. It increases the horizontal resistance of a full block by over 60 %. It is used in watertight systems with groundwater outside the system or in multiple-layer storage/infiltration systems with great installation depths.
- The adapter for Rigofill ST-A provides an inlet connection with an optimised flow design with diffuser effect for solid wall pipes DN/OD 315, 400 and 500. It can be connected to Rigofill ST-A easily and quickly thanks to the snap connection.
- Connectors secure Rigofill ST-A during installation.
- Mechanically bonded and thermally treated polypropylene (PP) geotextile with its unsurpassed combination of excellent water permeability, great thickness and optimum opening width ensures long-term filter functionality. Geotextile class 3. CE-certified according to DIN EN 13252.

Sidewall grid full block

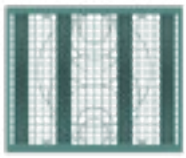

Sidewall grid half block

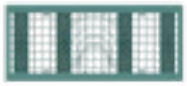

Supporting grid

Adapter

Ventilation unit

Single-layer connector

Multiple-layer connector

CE 0799-CPR-55

RigoFlor

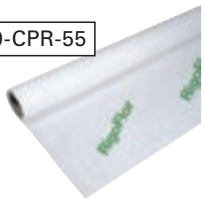

Product	Cat. no.	Technical data		PU	DG	Price [€/pc.]
Rigofill ST-A sidewall grid full block	51594585	W x D x H = 800 x 30 x 660 mm Connections: DN 110, 125, 160, 200, 225, 250, 315, 400, 500		55 pc(s)./ pal.	EX40	**11.50**
Rigofill ST-A sidewall grid half block	51594586	W x D x H = 800 x 30 x 350 mm Connections: DN 110, 125, 160, 200, 225, 250		117 pc(s)./ pal.	EX40	**8.00**
Rigofill ST-A sidewall grid short full block	51594588	W x D x H = 770 x 30 x 660 mm Connections: DN 110, 125, 160, 200, 225, 250, 315, 400, 500		55 pc(s)./ pal.	EX40	**13.40**
Rigofill ST-A sidewall grid short half block	51594589	W x D x H = 770 x 30 x 350 mm Connections: DN 110, 125, 160, 200, 225, 250		117 pc(s)./ pal.	EX40	**10.00**
Rigofill ST-A supporting grid	51594590	For Rigofill ST-A full block W x D x H = 800 x 800 x 40 mm		34 pc(s)./ pal.	EX40	**21.00**
Rigofill ST-A adapter full block	51594587	W x H = 800 x 660 mm Connections: DN 315, 400, 500		12 pc(s)./ pal.	EX40	**245.00**
Ventilation unit	51990110	Connection panel, structured-wall pipe DN 110 (L = 3.0 m), ventilation cowl and profile sealing ring DN 110		1 pc(s).	EX40	**147.00**
Single-layer connector (suitable for single-layer installations)	51594301	Requirement for single-row installation	1 pc(s). per module	100 pc(s).	EX40	**0.90**
		Requirement for multiple-row installation	2 pc(s). per module			
Multiple-layer connector (for multiple-layer installations)	51594302	Requirement for two-layer installation	1 pc(s). per module	100 pc(s).	EX40	**0.90**
		Requirement for three-layer installation	1.3 pc(s). per module (factor 1.3)			

Please always order block connectors separately – the above data is provided for information only.

RigoFlor	51695000	200 g/m²; 4 m width; 50 m length	200 m²	EX40	**2.45**
	51695002	200 g/m²; 4 m width; 25 m length	100 m²		**2.45**
	51695003	200 g/m²; 4 m width; 10 m length	40 m²		**2.85**

Recommended retail price. Actual design may differ.
Actual dimensions may differ within the scope of production tolerances.

Quadro®Control ST-Advanced – system shaft for Rigofill® ST-A

QuadroControl ST-Advanced is a polypropylene (PP) inspection shaft which can be integrated into the storage/infiltration system. It is square with a base of 800 x 800 mm and can be used anywhere in the layout. Its height results from the number of layers of the connected storage/infiltration system. The shaft allows comfortable access to the inspection tunnel from above ground. High-performance inspection and flushing technology can easily be inserted into the inspection tunnel. The shaft is integrated into the storage/infiltration system and grows layer by layer as construction progresses. QuadroControl ST-Advanced is delivered with all required components and will be assembled on site.

Recommended accessories: QuadroControl ST-A shaft accessories (see page 93) and accessories for Rigofill ST-A (see page 91).

Application: multifunctional system shaft for Rigofill ST-A storage/infiltration systems, can be integrated anywhere in the modular block type structure, for inlet connection and ventilation as well as for inspection and maintenance of the system. Please observe our installation manual.

1/2-layer

1 1/2-layer

Supporting grid shaft

Product	Cat. no.	Technical data	PU	DG	Price [€/pc.]
QuadroControl ST-A 1/2-layer	51594505	WxDxH = 800 x 800 x 350 mm [1] Couple cone and one profile sealing ring included.	1 pc(s).	EX40	**231.00**
QuadroControl ST-A 1-layer	51594510	WxDxH = 800 x 800 x 660 mm [1] Couple cone and one profile sealing ring included.	1 pc(s).	EX40	**331.00**
QuadroControl ST-A 1 1/2-layer	51594515	WxDxH = 800x800x1,010 mm [1] Couple cone and one profile sealing ring included.	1 pc(s).	EX40	**423.00**
QuadroControl ST-A 2-layer	51594520	WxDxH = 800 x 800 x 1,320 mm [1] Couple cone and one profile sealing ring included.	1 pc(s).	EX40	**538.00**
QuadroControl ST-A 2 1/2-layer	51594525	WxDxH = 800x800x1,670 mm [1] Couple cone and one profile sealing ring included.	1 pc(s).	EX40	**615.00**
QuadroControl ST-A 3-layer	51594530	WxDxH = 800 x 800 x 1,980 mm [1] Couple cone and one profile sealing ring included.	1 pc(s).	EX40	**685.00**
QuadroControl ST-A 3 1/2-layer	51594535	WxDxH = 800 x 800 x 2,330 mm [1] Couple cone and one profile sealing ring included.	1 pc(s).	EX40	**769.00**
QuadroControl ST-A 4-layer	51594540	WxDxH = 800 x 800 x 2,640 mm [1] Couple cone and one profile sealing ring included.	1 pc(s).	EX40	**846.00**
QuadroControl ST-A supporting grid	51594591	W x D x H = 800 x 800 x 40 mm	1 pc(s).	EX40	**46.00**

[1] Plus 130 mm couple cone total height

QuadroControl ST-A structure

The shaft cone is the transition to the extension pipe. The length of the extension pipe is chosen depending on the installation depth.

The shaft is integrated into the storage/infiltration system and grows layer by layer as construction progresses.

The shaft components are stackable, and delivery includes the cone with all required components.

Inlet detail

Number of layers	Height "H"
1/2	350 mm
1	660 mm
1 1/2	1,010 mm
2	1,320 mm
2 1/2	1,670 mm
3	1,980 mm
3 1/2	2,330 mm
4	2,640 mm

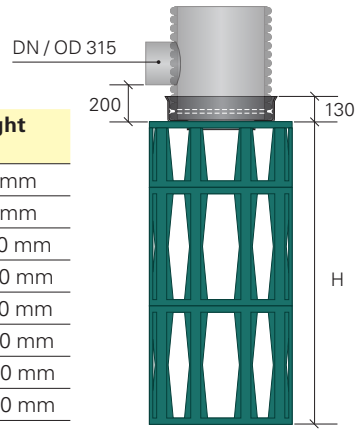

Recommended retail price. Actual design may differ.
Actual dimensions may differ within the scope of production tolerances.

Shaft accessories D_0 600

Extension pipe D_0 600 without inlet incl. temporary construction site cover

Extension pipe D_0 600 with inlet incl. temporary construction site cover

Profile sealing ring

Coupling

Profile sealing ring

DOM sealing ring

Sediment trap D_0 600

Filter set D_0 600

Geotextile filter bag D_0 600

Product	Cat. no.	Technical data	PU	DG	Price [€/pc.]
Extension pipe [1] without inlet	51550551	D_O = 600; 1 m length	1 pc(s).	EX40	**121.00**
	51550552	D_O = 600; 2 m length	1 pc(s).		**237.00**
	51550553	D_O = 600; 3 m length	1 pc(s).		**336.00**
	51550556	D_O = 600; 6 m length	1 pc(s).		**630.00**
Extension pipe [1] with inlet DN/OD 200	51550581	D_O = 600; 1 m length	1 pc(s).	EX40	**231.00**
	51550582	D_O = 600; 2 m length	1 pc(s).		**315.00**
	51550583	D_O = 600; 3 m length	1 pc(s).		**425.00**
Extension pipe [1] with inlet DN/OD 315	51550591	D_O = 600; 1 m length	1 pc(s).	EX40	**263.00**
	51550592	D_O = 600; 2 m length	1 pc(s).		**415.00**
	51550593	D_O = 600; 3 m length	1 pc(s).		**515.00**
Coupling	51910500	For extension pipe D_O 600	1 pc(s).	EX40	**63.00**
Profile sealing ring [2]	51919501	For extension pipe D_O 600	1 pc(s).	EX40	**19.85**
DOM sealing ring	51919505	For extension pipe D_O 600; as seal between concrete support ring and extension pipe	1 pc(s).	EX40	**36.75**
Sediment trap D_O 600	51991095	Suitable for installation under CW 610 shaft covers	1 pc(s).	EX40	**104.80**
Filter set D_O 600	51991002	Swale emergency overflow for shafts D_O 600 comprising dirt trap and geotextile filter bag	1 pc(s).	EX40	**297.40**
Geotextile filter bag D_O 600	51991099	Replacement part of the filter set D_O 600	1 pc(s).	EX40	**81.00**

Shaft covers acc. to DIN EN 124	–	Class B or D, CW 610	–	–	**to be supplied on site**
Gully gutter acc. to DIN EN 124	–	Class B, C or D, CW 610	–	–	
Support ring acc. to DIN 4034, Part 1	–	Height: 100 mm	–	–	

[1] Pre-mounted temporary construction site cover included.

[2] For lubricant for watertight coupling joints, see page 62.

QuadroControl ST-A structure

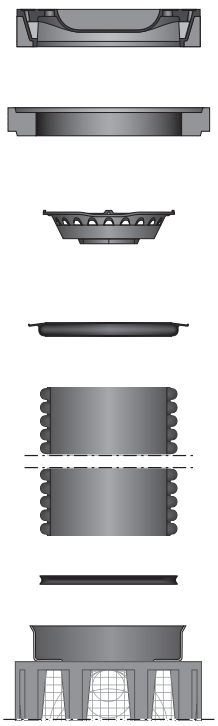

Structure of swale emergency overflow

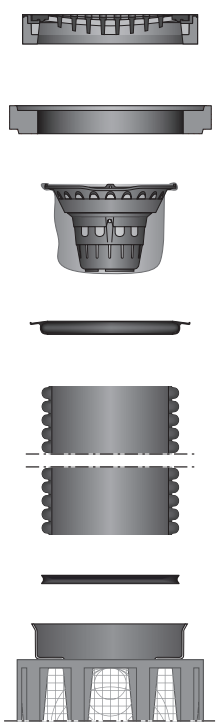

Recommended retail price. Actual design may differ.
Actual dimensions may differ within the scope of production tolerances.

Quadro® Limit – system shaft with integrated vortex valve

System throttle shaft for stormwater retention systems in Rigofill design
Plastic shaft, block type structure, consisting of one or several shaft base bodies plus cone depending on the layers of the planned Rigofill system, material: PE-HD, colour black, dimensions: 800 x 800 mm, height according to the number of layers of the storage/infiltration system, dimension-compatible with Rigofill, with extension pipe D_O 600, 500 mm clear opening diameter. With integrated stainless steel vortex valve, manufacturer: **UFT Umwelt- und Fluid-Technik Dr. H. Brombach GmbH**, outlet diameter between DN/OD 250 and DN/OD 400 (depending on discharge performance and head), throttle outlet range from 2 to 125 l/s depending on the head (higher values available on request).

Recommended accessories: QuadroControl ST-A shaft accessories (see page 93), QuadroOverflow (see page 95).

Application: throttle shaft for stormwater retention systems consisting of Rigofill storage/ infiltration modules. Can be installed at any point alongside the system (sidewall grids required on the connection side to the modules – please contact us). Ideal for systems that must achieve high operating reliability and high drainage efficiency across all operating stages.

Product	Cat. no.	Technical data	PU	DG	Price [€/pc.]
QuadroLimit ½	51500052	W x D x H = 800 x 800 x 350 mm [1]	1 pc(s).	EX40	**on request**
QuadroLimit 1	51501002	W x D x H = 800 x 800 x 660 mm [1]	1 pc(s).	EX40	**on request**
QuadroLimit 1 ½	51501052	W x D x H = 800 x 800 x 1.010 mm [1]	1 pc(s).	EX40	**on request**
QuadroLimit 2	51502002	W x D x H = 800 x 800 x 1.320 mm [1]	1 pc(s).	EX40	**on request**
QuadroLimit 2 ½	51502052	W x D x H = 800 x 800 x 1.670 mm [1]	1 pc(s).	EX40	**on request**
QuadroLimit 3	51503002	W x D x H = 800 x 800 x 1.980 mm [1] [2]	1 pc(s).	EX40	**on request**
QuadroLimit project shaft	51509002	Design acc. to drawing	1 pc(s).	EX40	**on request**

[1] Plus 250 mm cone total height.
[2] Other and/or taller throttle shafts available on request.

Integrated vortex valve technology in cooperation with UFT

- Large outlet opening to prevent blockages
- Flushing peak, i.e., early reaching of high discharge volumes and discharge of contaminants to minimise the system volume
- Almost constant discharge
- Durable and hard-wearing stainless steel throttle for high operational reliability
- No moveable parts, no wear and tear
- Pressure cleaning can be used to clean the system
- Integrated same-level
- The project-specific installation is conducted by FRÄNKISCHE in cooperation with UFT

Quadro® Overflow – system shaft with integrated overflow threshold

System shaft as tank overflow for stormwater retention systems in Rigofill design
Plastic shaft, block type structure, consisting of shaft base body and cone.
Material: PE-HD, colour black, dimensions: 800 x 800 mm, height: 350 mm or 660 mm.
Dimension-compatible with Rigofill modules. With extension pipe D_O 600, clear opening diameter 500 mm. With integrated overflow pipe, top edge of overflow pipe and top edge of system same level. Outlet diameter DN/OD 315 or DN/OD 250.

Recommended accessories: QuadroControl ST-A shaft accessories (see page 93).

Application: overflow shaft for stormwater retention systems consisting of Rigofill storage/infiltration modules to limit the maximum water level. QuadroOverflow can be installed at any point alongside the storage/infiltration system (sidewall grids required on the connection side to the modules – please contact us). With multiple-layer systems, it is installed in the top layer.

Product	Cat. no.	Technical data	PU	DG	Price [€/pc.]
QuadroOverflow ½	51595691	WxDxH = 800 x 800 x 350 mm [1] Outlet nominal diameter DN/OD 250	1 pc(s).	EX40	**588.00**
QuadroOverflow 1	51595693	WxDxH = 800 x 800 x 660 mm [1] Outlet nominal diameter DN/OD 315	1 pc(s).	EX40	**893.00**
QuadroOverflow ½ groundwater [2]	51595692	W x D x H = 800 x 800 x 350 mm [1] Outlet nominal diameter DN/OD 250	1 pc(s).	EX40	**772.00**
QuadroOverflow 1 groundwater [2]	51595694	W x D x H = 800 x 800 x 660 mm [1] Outlet nominal diameter DN/OD 315	1 pc(s).	EX40	**1,040.00**

[1] Plus 250 mm cone total height.
[2] Application/use required only for the installation in half-layer (H = 0.35 m)/single-layer (H = 0.66 m) watertight systems in the groundwater.

QuadroTake – fire water tapping shaft

QuadroTake – the tapping shaft for fire water supply
The tapping point with suction nozzle in accordance with DIN 14319 (A fixed coupling) is part of an underground fire water tank pursuant to DIN 14230. Depending on the tank volume, up to 3 tapping points may need to be provided.

In addition to our RigoCollect fire water tanks, QuadroTake now offers the option of integrating one or more tapping points into the module volume in accordance with DIN 14230.

The tapping shaft consists of the following components, among others for fire water tapping:

- QuadroTake base shaft including pump sump in accordance with DIN 14230
- Suction pipe DN/ID 125 made of stainless steel including installation accessories
- Suction connection above ground without dipstick (form B) in accordance with DIN 14244
- Extension pipe DN/ID 500
- Class A15 cover made of plastic
- Ventilation pipe
- Signage for fire water tanks in accordance with DIN 4066

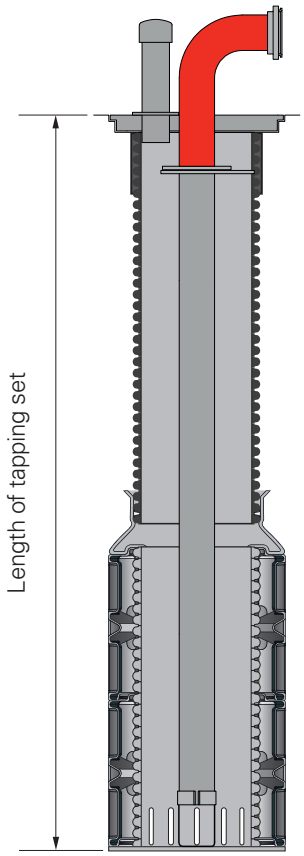

The tapping point can also be used for general tapping from public cisterns or other storage systems.

Application: tapping shaft that can be integrated into the module volume with internal DN/ID 125 suction pipe and suction connection above ground without dipstick (form B) in accordance with DIN 14244. For use as fire water tapping point or as general suction connection.

Product	Cat. no.	Technical data	PU	DG	Price [€/pc.]
QuadroTake 1 with pump sump	51595751	W x D x H = 800 x 800 x 1320 mm	1 pc(s).	EX40	**1,110.00**
QuadroTake 1 1/2 with pump sump	51595752	W x D x H = 800 x 800 x 1670 mm	1 pc(s).	EX40	**1,320.00**
QuadroTake 2 with pump sump	51595753	W x D x H = 800 x 800 x 1980 mm	1 pc(s).	EX40	**1,389.00**
QuadroTake 2 1/2 with pump sump	51595754	W x D x H = 800 x 800 x 2330 mm	1 pc(s).	EX40	**1,667.00**
QuadroTake 3 with pump sump	51595755	W x D x H = 800 x 800 x 2670 mm	1 pc(s).	EX40	**1,944.00**
QuadroTake extension pipe incl. receptacle for fire water suction pipe, shaft cover	51595761	Extension pipe 1 m DO = 600, total length 1 m	1 pc(s).	EX40	**1,042.00**
	51595762	Extension pipe 2 m DO = 600, total length 2 m,	1 pc(s).		**1,110.00**
	51595763	Extension pipe 3 m DO = 600, total length 3 m	1 pc(s).		**1,181.00**
QuadroTake tapping set incl. ventilation unit	51595770	Tapping set up to 2.50 m	1 pc(s).	EX40	**5,972.00**
	51595771	Tapping set up to 3.25 m	1 pc(s).		**6,250.00**
	51595772	Tapping set up to 4.00 m	1 pc(s).		**6,528.00**
	51595773	Tapping set up to 4.75 m	1 pc(s).		**6,806.00**
More accessories	51595782	Sign reading "Fire water tapping point"	1 pc(s).	EX40	**550.00**

Advantages of QuadroTake:

- Integrated design
- Easy installation
- On-site assembly – flexible height adjustment
- Internal components can be removed

Recommended retail price. Actual design may differ.
Actual dimensions may differ within the scope of production tolerances.

AquaLimit – with integrated vortex valve

Throttle shaft for stormwater retention systems
Polypropylene (PP) shaft D_O 600, black outside, yellow inside. With integrated stainless steel vortex valve, manufacturer: **UFT Umwelt- und Fluid-Technik Dr. H. Brombach GmbH,** inlet diameter DN/OD 200 or DN/OD 250 or structured-wall pipe. Outlet diameter DN/OD 250. Throttle outlet range ranging from 0.5 l/s to 60 l/s depending on the head.

Application: throttle shaft for Rigofill ST, SickuPipe, MuriPipe stormwater retention systems or ground basins. Ideal for systems that must achieve high operating reliability and high drainage efficiency across all operating stages.

Product	Cat. no.	Technical data	PU	DG	Price [€/pc.]
AquaLimit project shaft	51240500	Use order form www.fraenkische.com	1 pc(s).	EX40	**on request**
DOM sealing ring	51719505	Seal between concrete support ring and extension pipe	1 pc(s).	EX40	**36.75**
Sediment trap D_O 600	51791095	Suitable for installation under covers	1 pc(s).	EX40	**104.80**

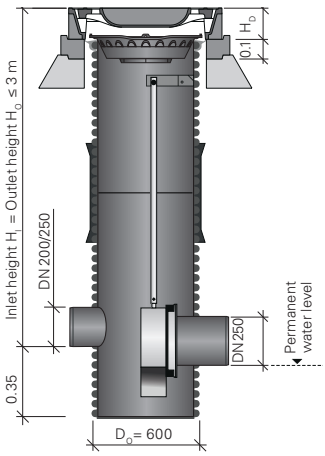

Shaft covers acc. to DIN EN 124	–	Class B or D; CW 610	1 pc(s).	EX40	**to be supplied on site**
Gully gutter acc. to DIN EN 124	–	Class B, C or D; CW 610	1 pc(s).	EX40	
Support ring acc. to DIN 4034	–	100 mm high; D_I = 625 mm	1 pc(s).	EX40	

NB

Please use the AquaLimit order form to place a precise order. www.fraenkische.com

Vortex valve

- Valve can be removed and re-inserted
- Emergency emptying of the tank possible
- Subsequent adjustment of the throttle outlet possible
- Large outlet opening to prevent blockages
- Flushing peak, i.e., early reaching of high discharge volumes and discharge of contaminants to minimise the system volume
- Almost constant discharge
- Durable and hard-wearing stainless steel throttle for high operational reliability
- No moveable parts, no wear and tear
- Pressure cleaning can be used to clean the system
- Integrated same-level
- The project-specific installation is conducted by FRÄNKISCHE in cooperation with UFT

Recommended retail price. Actual design may differ.
Actual dimensions may differ within the scope of production tolerances.

AquaLimit tube – with integrated tube throttle

AquaLimit tube is a modular polypropylene (PP) throttle shaft D_O 600 that is suitable for many applications and features an integrated tube throttle produced by **UFT Umwelt- und Fluid-Technik Dr. Brombach GmbH**. AquaLimit tube combines a strong discharge performance with highest operational reliability. The modular shaft is characterised by its steep Q(h) characteristics, its short delivery time, and its easy installation. The removable tube throttle can be maintained and the throttle outlet can be adjusted subsequently. Inlet and outlet diameter DN/OD 250; throttle outlet range of 1.6–10 l/s depending on the head.

Application: throttle shaft for Rigofill , SickuPipe, MuriPipe stormwater retention systems or ground basins. Ideal for systems that must achieve high operating reliability and high drainage efficiency across all operating stages.

Product	Cat. no.	Technical data	PU	DG	Price [€/pc.]
AquaLimit tube	51241135	Shaft height 1.00 m – 1.35 m Use order form www.fraenkische.com	1 pc(s).	EX40	**3,675.00**
	51241235	1.35 m–2.35 m shaft height Use order form www.fraenkische.com	1 pc(s).		**3,869.00**
	51241335	2.35 m–3.35 m shaft height Use order form www.fraenkische.com	1 pc(s).		**4,064.00**
DOM sealing ring	51719505	Seal between concrete support ring and extension pipe	1 pc(s).	EX40	**36.75**
Sediment trap D_O 600	51791095	Suitable for installation under covers	1 pc(s).	EX40	**104.80**

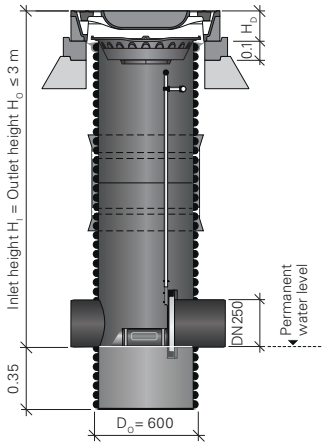

Shaft covers acc. to DIN EN 124	–	Class B or D; CW 610	1 pc(s).	EX40	**to be supplied on site**
Gully gutter acc. to DIN EN 124	–	Class B, C or D; CW 610	1 pc(s).	EX40	
Support ring acc. to DIN 4034	–	100 mm high; D_I = 625 mm	1 pc(s).	EX40	

NB

Please use the AquaLimit tube order form to place a precise order. www.fraenkische.com

Tube throttle

- Constant discharge through all operating stages
- High operating reliability thanks to large outlet opening – no risk of blockages
- Reduction in discharge time – system volume is available for the next rainfall
- Minimisation of required storage volume – self-activating and solely hydraulically controlled – no external power supply
- Bottom-aligned installation – no height loss
- Easy installation
- Small discharge values can be realised
- Corrosion-free
- No mechanically moved parts

Recommended retail price. Actual design may differ.
Actual dimensions may differ within the scope of production tolerances.

Rigo® Limit V – with integrated vortex valve

DOM sealing ring

Sediment trap D_O 600

Profile sealing ring

Coupling

Profile sealing ring

Extension pipe D_O 600

Profile sealing ring

RigoLimit V

Throttle shaft for stormwater retention systems
Plastic shaft D_O 600, extension pipe with black outside and yellow inside for optimum inspectability. Inlet diameter DN/OD 200. Outlet diameter DN/OD 250. Throttle outlet range ranging from 0.5 l/s to 65 l/s depending on the head.

Application: throttle shaft for Rigofill ST, SickuPipe, MuriPipe stormwater retention systems or ground basins. Ideal for systems that must achieve high operating reliability and high drainage efficiency across all operating stages.

Product	Cat. no.	Technical data	PU	DG	Price [€/pc.]
RigoLimit V throttle shaft incl. profile sealing ring, exchangeable orifice	51240610	D_O 600; Use order form www.fraenkische.com	1 pc(s).	EX40	**1,239.00**
Extension pipe [1]	51550551	D_O = 600; 1 m length	1 pc(s).	EX40	**121.00**
	51550552	D_O = 600; 2 m length	1 pc(s).		**237.00**
	51550553	D_O = 600; 3 m length	1 pc(s).		**336.00**
	51550556	D_O = 600; 6 m length	1 pc(s).		**630.00**
Extension pipe [1] with connection as emergency overflow; project-specific (max. DN 315 KG)	51550529	D_O 600; Use order form www.fraenkische.com	1 pc(s).	EX40	**on request**
Coupling	51910500	For extension pipe D_O 600	1 pc(s).	EX40	**63.00**
Profile sealing ring[2]	51919501	For extension pipe D_O 600	1 pc(s).	EX40	**19.85**
DOM sealing ring	51919505	For extension pipe D_O 600; as seal between concrete support ring and extension pipe	1 pc(s).	EX40	**36.75**
Sediment trap D_O 600	51991095	Suitable for installation under covers CW 610	1 pc(s).	EX40	**104.80**
Shaft covers acc. to DIN EN 124	–	Class B or D; CW 610 with ventilation openings	1 pc(s).	EX40	**to be supplied on site**
Support ring acc. to DIN 4034, Part 1	–	100 mm high D_I = 625 mm	1 pc(s).	EX40	

[1] Pre-mounted temporary construction site cover included.
[2] For lubricant for watertight coupling joints, see page 62.

NB
Please use the RigoLimit V order form to place a precise order. www.fraenkische.com

Exchangeable orifice

- Orifice can be removed and re-inserted
- Emergency emptying of the tank possible
- Subsequent adjustment of the throttle outlet possible
- Large outlet opening to prevent blockages
- Flushing peak, i.e., early reaching of high discharge volumes and discharge of contaminants to minimise the system volume
- Almost constant discharge
- Corrosion-free, durable and hard-wearing throttle for high operational reliability
- No moveable parts, no wear and tear
- Pressure cleaning can be used to clean the system
- Same-level design available on request
- The project-specific installation is conducted by FRÄNKISCHE in cooperation with UFT

Recommended retail price. Actual design may differ.
Actual dimensions may differ within the scope of production tolerances.

Rigo® Limit V accessories

Product	Cat. no.	Technical data	PU	DG	Price [€/pc.]
Exchangeable orifice for subsequent adjustment of the discharge	51791600	Use order form www.fraenkische.com	1 pc(s).	EX40	**457.00**
Tool for (subsequent) lifting and inserting the exchangeable orifice	51791610	D_O = 16 mm; Scope of delivery: Attachment piece (L = 480 mm) + extension rods (L = 4 x 1.5 m)	1 pc(s).	EX40	**74.00**

RigoLimit V dimensions

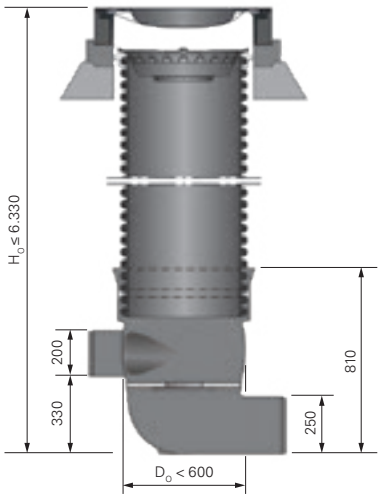

RigoLimit V structure

Class B or D
shaft covers acc. to DIN EN 124, CW 610

Support ring
acc. to DIN 4034, Part 1

Sediment trap
D_O 600

DOM sealing ring

Extension pipe
D_O 600
incl. temporary construction site cover

Profile sealing ring

RigoLimit V

Recommended retail price. Actual design may differ.
Actual dimensions may differ within the scope of production tolerances.

AquaBackstop – shaft with insertable check valve

The check valve to protect against damaging backwater from the sewer network.

AquaBackstop is a modular polypropylene (PP) prefabricated shaft D_O 600 that is suitable for numerous applications and features an integrated check valve produced by **UFT Umwelt- und Fluid-Technik Dr. Brombach GmbH**.

The check valve, consisting of a diagonally cut stainless steel pipe section and a rubber flap, has been designed for use in stormwater applications and is characterised by its low pressure loss in the direction of flow, which means that it opens even with slight overpressure from the headwater and allows the water to flow off. In the event of backwater, the rubber flap presses firmly and evenly against the narrow, polished sealing edge of the pipe socket, thus closing the flow opening. The inlet and outlet diameter on the shaft itself is DN/OD 250. The free passage through the check valve is DN/ID 200.

Application: prefabricated shaft with integrated check valve for stormwater retention systems made of Rigofill storage/infiltration modules or open ground basins. The check valve protects the basins above against backwater from the sewer system below or receiving waters.

DOM sealing ring

Sediment trap
D_O 600

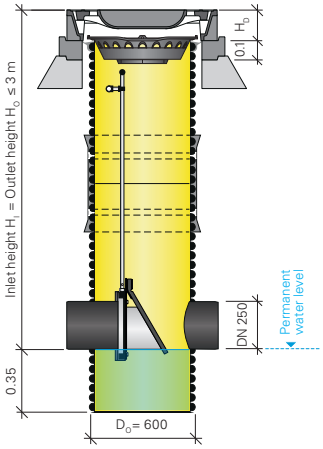

Product	Cat. no.	Technical data	PU	DG	Price [€/pc.]
AquaBackstop	51243135	AquaBackstop 1.00 m – 1.35 m	1 pc(s).	EX40	**4,445.00**
	51243235	AquaBackstop 1.35 m – 2.35 m	1 pc(s).		**4,722.00**
	51243335	AquaBackstop 2.35 m – 3.35 m	1 pc(s).		**4,998.00**
DOM sealing ring	51719505	Seal between concrete support ring and extension pipe	1 pc(s).	EX40	**36.75**
Sediment trap D_O 600	51791095	Suitable for installation under covers	1 pc(s).	EX40	**104.80**

Shaft covers acc. to DIN EN 124	–	Class B or D; CW 610	1 pc(s).	EX40	**to be supplied on site**
Gully gutter acc. to DIN EN 124	–	Class B, C or D; CW 610	1 pc(s).	EX40	
Support ring acc. to DIN 4034	–	100 mm high; D_I = 625 mm	1 pc(s).	EX40	

Check valve

- Design without housing – mounted on removable board
- Easy assembly
- No bearings, no mechanics
- Stainless steel housing – absolutely corrosion-resistant
- Easy opening in flow direction
- Closes securely in reverse direction
- Board with check valve can be removed – therefore easy maintenance without requiring access

Recommended retail price. Actual design may differ.
Actual dimensions may differ within the scope of production tolerances.

SickuPipe®/MuriPipe infiltration pipe

QUALITY-MONITORED

Swale infiltration pipe with large perforation area
Totally perforated PE-HD pipe (TP, type R2) acc. to DIN 4262-1 and DIN 19666; nominal diameter DN/ID 200 and 300; in structured-wall design (smooth inside, corrugated outside); with circumferentially arranged perforations; with a proven maximum total perforation area acc. to DWA-A 138; total perforation area greater than or equal to 180 and 150 cm²/m; colour green; with one coupling; sandtight; 6 m individual length; quality-approved.

Application: totally perforated pipe for the distribution and infiltration of stormwater and drainage water in gravel swales (pipe swales and/or underdrained swale systems according to DWA-A 138).

Recommended accessories: accessories for swale pipes DN 300 (see pages 103 – 104), accessories for MuriPipe DN 200 (see page 104).

NB
DN/ID 300 TP: total perforation area ≥ 180 cm²/m

NB
DN/ID 200 TP: total perforation area ≥ 150 cm²/m

Product	Cat. no.	Technical data	PU	Price [€/m]
SickuPipe 300 TP perforated swale infiltration pipe	51100300	DN/ID 300; 6 m length Total perforation area ≥ 180 cm²/m D_O 347; D_I 300	72 m/pal.	**24.00**
MuriPipe 200 TP perforated swale infiltration pipe	51200200	DN/DN 200; 6 m length; total perforation area ≥ 150 cm²/m D_O 235; D_I 200	162 m/pal.	**11.40**

SickuPipe®/MuriPipe unperforated

QUALITY-MONITORED

Unperforated swale pipe
PE-HD transport pipe (UP, R2 type) according to DIN 4262-1 and DIN 19666; nominal diameter DN/ID 300; in structured-wall design (smooth inside, corrugated outside); colour green; with one coupling; sandtight, 6 m individual length; quality-approved.

Application: transport pipe for the distribution of stormwater runoff and drainage water into gravel swales (pipe swales and/or underdrained swale systems according to DWA-A 138).

Recommended accessories: accessories for swale pipes DN 300 (see pages 103 – 104), accessories for MuriPipe DN 200 (see page 104).

Product	Cat. no.	Technical data	PU	Price [€/m]
SickuPipe 300 UP unperforated swale pipe	51110300	DN/ID 300; 6 m length D_O 347; D_I 300	72 m/pal.	**24.00**
MuriPipe 200 UP unperforated swale pipe	51210200	DN/ID 200; 6 m length D_O 235; D_I 200	162 m/pal.	**11.40**

Recommended retail price. Actual design may differ.
Actual dimensions may differ within the scope of production tolerances.

SickuPipe® accessories

Other fittings available on request.

Product	Cat. no.	Technical data	PU	DG	Price [€/pc.]
SD coupling	51610300	DN 300; sandtight connection (SD)	1 pc(s).	EX40	**28.10**
End plug	51680300	DN 300	1 pc(s).	EX40	**15.30**
15° bend	51623300	DN 300	1 pc(s).	EX40	**210.60**
30° bend	51622300	DN 300	1 pc(s).	EX40	**199.60**
45° bend	51621300	DN 300	1 pc(s).	EX40	**145.50**
90° bend	51620300	DN 300	1 pc(s).	EX40	**169.80**
Tee	51630300	DN 300/DN 300	1 pc(s).	EX40	**226.00**
	51638300	DN 300/DN 200 KG [1]	1 pc(s).		**192.90**
KG coupling adapter with reducer	51663300	DN 300/DN 100 KG spigot can be inserted	1 pc(s).	EX40	**93.70**
	51662300	DN 300/DN 150 KG spigot can be inserted	1 pc(s).		**93.70**
	51661300	DN 300/DN 200 KG spigot can be inserted	1 pc(s).		**99.20**
KG adapter with spigot	51661301	DN 300/DN 300 KG push-fit coupling	1 pc(s).	EX40	**55.10**
Reducer	51669300	DN 300/DN 200 structured-wall pipe	1 pc(s).	EX40	**234.80**
Shaft lining	51688300	DN 300	1 pc(s).	EX40	**120.00**

[1] For inlet reducers, see shaft accessories on page 99.

SickuPipe® accessories

Other fittings available on request.

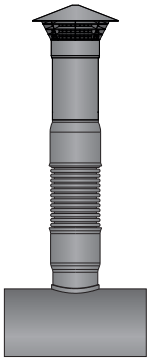

Product	Cat. no.	Technical data	PU	DG	Price [€/pc.]
Ventilation unit comprising: Saddle DN 300 3 m structured-wall pipe; DN 110; Ventilation cowl	51690000	DN 300 / DN 110	1 pc(s).	EX40	**120.00**

MuriPipe DN 200 accessories

Other fittings available on request.

Product	Cat. no.	Technical data	PU	DG	Price [€/pc.]
SD coupling	51710200	DN 200; sandtight connection (SD)	1 pc(s).	EX40	**19.30**
End plug	51780200	DN 200	1 pc(s).	EX40	**7.15**
15° bend	51723200	DN 200	1 pc(s).	EX40	**86.00**
30° bend	51722200	DN 200	1 pc(s).	EX40	**92.60**
45° bend	51721200	DN 200	1 pc(s).	EX40	**99.25**
90° bend	51720200	DN 200	1 pc(s).	EX40	**121.30**
Tee	51730200	DN 200 / DN 200	1 pc(s).	EX40	**131.20**
	51737200	DN 200 / DN/OD 160	1 pc(s).		**98.10**
Adapter to smooth-wall pipe	51760200	DN 200 / DN/OD 200	1 pc(s).	EX40	**38.85**
Shaft lining	51788200	DN 200	1 pc(s).	EX40	**24.80**

Recommended retail price. Actual design may differ.
Actual dimensions may differ within the scope of production tolerances.

SickuControl®

Universal shaft for pipe swales and underdrained swale systems
PE-HD shaft, in structured-wall design (smooth inside, corrugated outside); outside diameter D_O 400, with integrated sedimentation chamber; colour green; with 1 to 4 connections DN 300 for SickuPipe or MuriPipe 300 TP swale infiltration pipe and/or SickuPipe or MuriPipe 300 UP unperforated swale pipe; can be extended with coupling and extension pipe (shaft accessories D_O 400); available with or without rotatable inlet with connection DN 200 (Drän/KG).

Application: multifunctional shaft for pipe swales and underdrained swale systems according to DWA-A 138, for inlet connection, water distribution and ventilation as well as for inspection and maintenance of the swale.

Recommended accessories: shaft accessories D_O 400 (see pages 107 – 108).

Product	Cat. no.	Technical data	PU	DG	Price [€/pc.]
SickuControl with rotatable inlet	51140401	1 connection DN 300	4 pc(s)./pal.	EX40	**333.00**
	51140402	2 connections DN 300 (180°)	4 pc(s)./pal.		**366.00**
	51141402	2 connections DN 300 (90°)	4 pc(s)./pal.		**366.00**
	51140403	3 connections DN 300 (T-shaped)	1 pc(s).		**441.00**
	51140404	4 connections DN 300 (cross-shaped)	1 pc(s).		**492.00**
SickuControl without rotatable inlet	51142401	1 connection DN 300	1 pc(s).	EX40	**225.00**
	51142402	2 connections DN 300 (180°)	1 pc(s).		**259.00**
	51143402	2 connections DN 300 (90°)	1 pc(s).		**259.00**
	51142403	3 connections DN 300 (T-shaped)	1 pc(s).		**333.00**
	51142404	4 connections DN 300 (cross-shaped)	1 pc(s).		**384.00**
SickuControl project shaft	51140400	Use order form www.fraenkische.com	1 pc(s).	EX40	**on request**

NB

Number, height and direction of connections can be selected according to each project's needs. Order via order form (with shaft table)

www.fraenkische.com

SickuControl variants

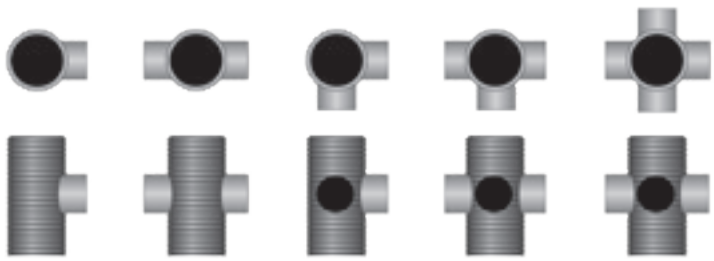

1x DN 300 | 2x DN 300 (180°) | 2x DN 300 (90°) | 3x DN 300 (T-shaped) | 4x DN 300 (cross-shaped)

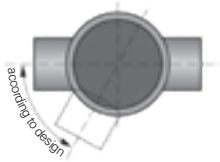

SickuControl project shaft

SickuControl without rotatable inlet

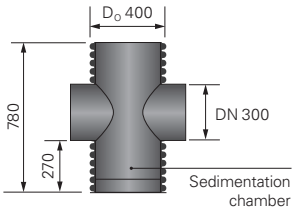

SickuControl with rotatable inlet

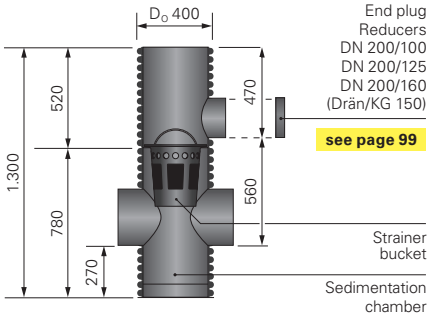

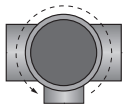

Recommended retail price. Actual design may differ.
Actual dimensions may differ within the scope of production tolerances.

MuriControl

Flushing and inspection shaft for underdrained swale systems
PE-HD shaft, in structured-wall design (smooth inside, corrugated outside); D_O 400 outside diameter; with sedimentation chamber; colour green, with 1 to 3 connections DN 200 for MuriPipe 200 TP swale infiltration pipe and/or MuriPipe 200 UP unperforated swale pipe; connections that are arranged in different heights can compensate height differences in terrain; can be extended with coupling and extension pipe (shaft accessories D_O 400).

Application: multifunctional shaft for underdrained swale systems according to DWA-A 138, for water distribution and ventilation, as overflow as well as for inspection and maintenance of the swale.

Recommended accessories: shaft accessories D_O 400 (see pages 107 – 108).

Product	Cat. no.	Technical data	PU	DG	Price [€/pc.]
MuriControl	51292001	1 connection DN 200	1 pc(s).	EX40	**250.00**
	51292002	2 connections DN 200 (180°)	1 pc(s).		**322.00**
	51292004	2 connections DN 200 (90°)	1 pc(s).		**322.00**
	51292003	3 connections DN 200 (T-shaped)	1 pc(s).		**393.00**
MuriControl project shaft	51241400	Use order form www.fraenkische.com	1 pc(s).	EX40	**on request**

NB

Number, height and direction of connections can be selected according to each project's needs. Order via order form (with shaft table)

www.fraenkische.com

MuriControl variants

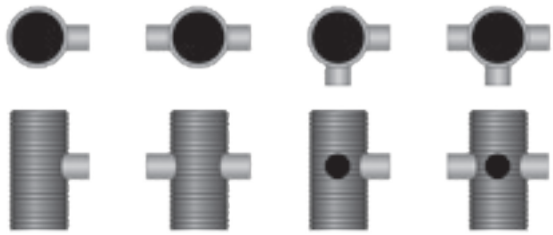

1x DN 200 | 2x DN 200 (180°) | 2x DN 200 (90°) | 3x DN 200 (T-shaped)

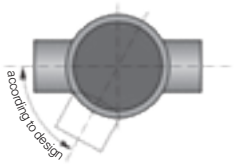

MuriControl project shaft

MuriControl

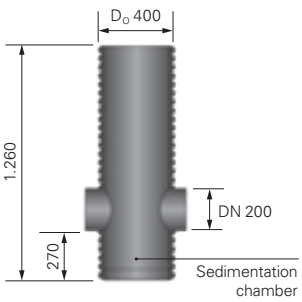

Recommended retail price. Actual design may differ.
Actual dimensions may differ within the scope of production tolerances.

SickuControl and MuriControl D_0 400 accessories

Structure of inspection shaft without rotatable inlet

Structure of inspection shaft with rotatable inlet

Structure of swale emergency overflow

Other fittings available on request.

Extension pipe

Coupling

Rotatable shaft inlet

Reducer adapter

Product	Cat. no.	Technical data	PU	DG	Price [€/pc.]
Extension pipe	5115040099	PE; D_0 400; 2 m length (incl. coupling)	1 pc(s). 8 pc(s)./ pal.	EX40	**93.00**
Coupling	51610400	For remaining pieces of extension pipe	1 pc(s).	EX40	**32.00**
DOM sealing ring	51619403	For extension pipe D_0 400; as seal between concrete support ring and extension pipe	1 pc(s).	EX40	**21.20**
Muri overflow pipe	51251400	PE; D_0 400; 2 m length	1 pc(s).	EX40	**75.00**
Rotatable shaft inlet	51638400	For SickuControl, MuriControl; D_0 400; inlet KG 200	1 pc(s).	EX40	**157.50**
Reducer adapter	51614300	DN 300/KG 200	1 pc(s).	EX40	**73.50**
Reducer for rotatable shaft inlet [1]	51613200	DN 200/DN 100 Drän	1 pc(s).	EX40	**13.25**
	51614200	DN 200/DN 100 KG	1 pc(s).		**13.25**
	51612200	DN 200/DN 125 Drän/KG	1 pc(s).		**13.25**
	51611200	DN 200/DN 160 Drän/150 KG	1 pc(s).		**13.25**
End plug	51680200	DN 200, suitable for rotatable inlet	1 pc(s).	EX40	**6.35**
End cap	51681300	For outlet DN 300 SickuControl	1 pc(s).	EX40	**13.20**

[1] To be used with the reducer adapter.

Recommended retail price. Actual design may differ.
Actual dimensions may differ within the scope of production tolerances.

SickuControl and MuriControl D_0 400 accessories

Other fittings available on request.

Temporary construction site cover D_0 400

Class A cast iron cover (without ventilation openings) with fixture

Class B and D cast iron cover with and without ventilation openings

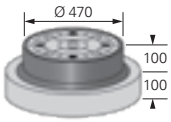

Hook for class D cast iron cover with screwless interlocking mechanism

Class B and D gully gutter

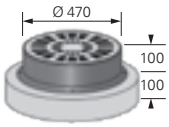

Concrete cover

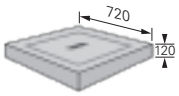

Sediment trap D_0 400

Filter set D_0 400

Strainer bucket D_0 350

Hook for filter set

Product	Cat. no.	Technical data	PU	DG	Price [€/pc.]
Temporary construction site cover D_0 400	51680400	Temporary construction site cover for shafts D_0 400	1 pc(s).	EX40	**14.70**
Class A 15 shaft cover [1]	51685100	Cast iron; with fixture; **without** ventilation openings	1 pc(s).	EX40	**66.70**
Class B 125 shaft cover [1] [2]	51684001	Cast iron; cast iron cover, cast iron frame, concrete support ring; **without** ventilation openings, CW 410	1 pc(s).	EX40	**218.50**
	51684000	Cast iron; cast iron cover, cast iron frame, concrete support ring; **with** ventilation openings, CW 410	1 pc(s).		**218.50**
Class D 400 shaft cover [1]	5168440199	Cast iron; cast iron cover, cast iron frame, concrete support ring; **without** ventilation openings with screwless interlocking mechanism, CW 410	1 pc(s).	EX40	**257.80**
	51685440	Cast iron; **surface-watertight**; cast iron cover with double screw connection, cast iron frame, concrete support ring; **without** ventilation openings, CW 410	1 pc(s).		**321.50**
	5168440099	Cast iron; cast iron cover, cast iron frame, concrete support ring; **with** ventilation openings with screwless interlocking mechanism, CW 410	1 pc(s).		**257.80**
Hook	55586990	Galvanised steel hook for class D covers with screwless interlocking mechanism	1 pc(s).	EX40	**78.40**
Gully gutter [1]	51684100	Cast iron; class B 125; gully gutter, cast iron frame, concrete support ring	1 pc(s).	EX40	**257.80**
Gully gutter with snap-on locking device [1]	51684500	Cast iron; class D 400; gully gutter with snap-on locking device, cast iron frame, concrete support ring	1 pc(s).	EX40	**286.00**
Concrete shaft cover	51683000	Concrete; 72 x 72 x 12 cm; outside traffic loads; without ventilation openings	1 pc(s).	EX40	**190.40**
Sediment trap D_0 400	51691002	Suitable for installation under CW 410 shaft covers	1 pc(s).	EX40	**64.15**
Filter set D_0 400	51690002	Dirt trap D_0 400 and geotextile filter bag D_0 400 for shafts D_0 400 as swale emergency overflow	1 set	EX40	**88.20**
Maintenance set D_0 400	51690012	3 geotextile filter bags D_0 400	1 set	EX40	**173.25**
Dirt trap D_0 400	51691000	For filter set D_0 400	1 pc(s).	EX40	**31.95**
Maintenance set D_0 350	51690013	3 geotextile filter bags D_0 350 for filter set D_0 350	1 set	EX40	**173.25**
Dirt trap D_0 350	51691003	For filter set D_0 350	1 pc(s).	EX40	**49.00**
Strainer bucket D_0 350	51691004	For installation under rotatable shaft inlet; 3 mm strainer mesh size; for shafts D_0 400	1 pc(s).	EX40	**187.95**
Hook for filter set	51698999	For filter and dirt trap; bent from 6 mm round steel; 90 cm length	1 pc(s).	EX40	**22.10**

[1] V2A material for screws.
[2] Also available with interlocking mechanism on request (surcharge) (available within approx. 6 weeks).

Recommended retail price. Actual design may differ.
Actual dimensions may differ within the scope of production tolerances.

Rigo® Flor

Mechanically bonded and thermally treated PP geotextile.
With an unsurpassed combination of excellent water permeability, great thickness and optimum opening width; ensures long-term filter functionality. Geotextile class 3.
CE-certified according to DIN EN 13252.

Application: special geotextile lining for infiltration systems and for swale sheathing. Suitable for pipe swales, underdrained swale systems and storage/infiltration systems.

Product	Cat. no.	Technical data	PU	DG	Price [€/m²]
RigoFlor	51695000	200 g/m²; 4 m width; L 50 m	200 m²	EX40	**2.45**
	51695002	200 g/m²; 4 m width; L 25 m	100 m²		**2.45**
	51695003	200 g/m²; 4 m width; L 10 m	40 m²		**2.85**

Retaining device

Stable PE plastic panel with a thickness of 10 mm. The retaining device is placed downstream of the swale and, if applicable, upstream of the RigoLimit V or AquaLimit throttle shaft and is firmly embedded in the surrounding native soil. The swale is sealed on the outlet side by a discharge barrier in order to prevent the uncontrolled discharge of water through the pipe swale. It is applied in, e.g., cascading swales. The device is delivered with the project-specific opening for the discharge pipe lead-through. The retaining device can consist of two or more parts depending on the project-specific size. Thanks to the modular design, the discharge pipe can be installed continuously. Individual elements are assembled on site starting from the base without any additional tools.

Product	Cat. no.	Technical data	PU	DG	Price [€/m²]
Retaining device	51793000	Manufactured according to project specifications Use order form www.fraenkische.com	1 pc(s).	EX40	**264.00**

Retaining device

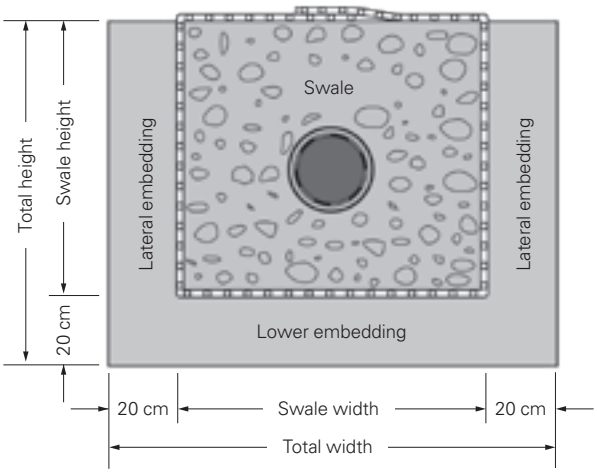

Recommended retail price. Actual design may differ.
Actual dimensions may differ within the scope of production tolerances.

Treatment systems product overview

The right system depending on the degree of pollution

	Shafts		**Tubular systems**		
Product	RigoClean	SediPoint	SediPipe level	SediPipe L	SediPipe XL
Features	Strainer including immersion wall	Vertically arranged flow separator including immersion pipe	Flow separator immersion wall	Flow separator immersion wall	Flow separator immersion wall
Illustration					
Treatment performance					
Functional principle	Filtering	Sedimentation	Sedimentation	Sedimentation	Sedimentation
Application					
Degree of pollution	●○○○	●●○○	●●○○	●●○○	●●○○
Typical characteristics	Protects storage/ infiltration systems against pollution	Flow separator operating principle for confined spaces	Bottom-aligned connections	Freely adjustable angles and installation depths	1000′ shafts Pre-assembled customer-specifically
Dimensioning acc. to DWA-M 153: max. connectable area	1,000 m²	3,650 m²	23,350 m²	44,450 m²	44,450 m²
According to DWA-A 102-2/ BWK-A 3-2		Performance verification and dimensioning acc. to DWA-A 102-2/ BWK-A 3-2	Performance verification and dimensioning acc. to DWA-A 102-2/ BWK-A 3-2	Performance verification and dimensioning acc. to DWA-A 102-2/ BWK-A 3-2	Performance verification and dimensioning acc. to DWA-A 102-2/ BWK-A 3-2
Maintenance interval	1 year	2 years	1–4 years (depending on system type and connected area)	1–4 years (depending on system type and connected area)	1–4 years (depending on system type and connected area)
Proof		■ LGA Würzburg ■ IKT Gelsenkirchen	■ HTWK Leipzig ■ ifs Hannover ■ LGA Würzburg ■ IKT Gelsenkirchen ■ TAUW / TU Delft	■ HTWK Leipzig ■ ifs Hannover ■ LGA Würzburg ■ IKT Gelsenkirchen ■ TAUW / TU Delft	■ HTWK Leipzig ■ ifs Hannover ■ LGA Würzburg ■ IKT Gelsenkirchen ■ TAUW / TU Delft

RIGOPLAN®
www.rigoplan-software.com

				Tubular systems with substrate step		
SediPipe 800	SediPipe L plus	SediPipe XL plus	SediPipe 800 plus	SediSubstrator basic	SediSubstrator L DIBt-approved	SediSubstrator XL DIBt-approved
Flow separator outlet bend	2 flow separators immersion wall	2 flow separators immersion wall	2 flow separators outlet bend	1 flow separator Substrate filter unit	1 flow separator Substrate filter unit	1 flow separator Substrate filter unit
	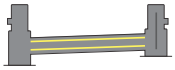	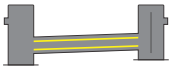				
Sedimentation	Sedimentation Oil separation	Sedimentation Oil separation	Sedimentation Oil separation	Sedimentation Oil separation Adsorption	Sedimentation Oil separation Adsorption	Sedimentation Oil separation Adsorption
●●○○	●●●○	●●●○	●●●○	●●●●	●●●●	●●●●
Allows angles or changes of direction	Oil separation performance in case of spills during rain	Oil separation performance in case of spills during rain	Oil separation performance in case of spills during rain	Outlet can be integrated in the storage/infiltration system	DIBt-approved stormwater treatment	DIBt-approved stormwater treatment
101,500 m²	44,450 m²	44,450 m²	101,500 m²	940 m²	3,000 m²	3,000 m²
Performance verification and dimensioning acc. to DWA-A 102-2/ BWK-A 3-2	Performance verification and dimensioning acc. to DWA-A 102-2/ BWK-A 3-2	Performance verification and dimensioning acc. to DWA-A 102-2/ BWK-A 3-2	Performance verification and dimensioning acc. to DWA-A 102-2/ BWK-A 3-2	Performance verification and dimensioning acc. to DWA-A 102-2/ BWK-A 3-2	Performance verification and dimensioning acc. to DWA-A 102-2/ BWK-A 3-2	Performance verification and dimensioning acc. to DWA-A 102-2/ BWK-A 3-2
1–4 years (depending on system type and connected area)	1–4 years (depending on system type and connected area)	1–4 years (depending on system type and connected area)	1–4 years (depending on system type and connected area)	4 years	4 years	4 years
■ HTWK Leipzig ■ ifs Hannover ■ LGA Würzburg ■ IKT Gelsenkirchen ■ TAUW / TU Delft	■ HTWK Leipzig ■ ifs Hannover ■ LGA Würzburg ■ IKT Gelsenkirchen ■ TAUW / TU Delft	■ HTWK Leipzig ■ ifs Hannover ■ LGA Würzburg ■ IKT Gelsenkirchen ■ TAUW / TU Delft	■ HTWK Leipzig ■ ifs Hannover ■ LGA Würzburg ■ IKT Gelsenkirchen ■ TAUW / TU Delft	■ ifs Hannover	■ LGA Würzburg	■ LGA Würzburg

Information concerning DIN 4262-1

Pipes and fittings for subsoil drainage of traffic areas and underground engineering

Part 1: Pipes, fittings and their joints made from PVC-U, PP and PE

DIN 4262-1/Last modified 10/2009		
Type		**FRW products**
R1	Circular, corrugated drainage pipes	
R2	Structured-wall pipes with smooth inside	**AquaPipe, AquaFlex, MuriPipe, RailPipe, SickuPipe, Strabusil, StormPipe**
R3	Circular, solid wall drainage pipes	
C1	Tunnel-shaped pipes with corrugated inside and smooth invert	**Strasil**
C2	Tunnel-shaped pipes with smooth inside	

DIN 4262-1/Last modified 10/2009		Former issues (01/2001)	
	TP = totally perforated pipe		**VS =** Vollsickerrohr
	LP = locally perforated pipe		**TS =** Teilsickerrohr
	MP = multi-purpose pipe		**MZ =** Mehrzweckrohr
	UP = unperforated pipe		

Load class capabilities of shaft covers		
Class	**Test load**	**Suitable for installation in**
A 15	15 kN	Areas that are used by pedestrians and cyclists only and similar areas.
B 125	125 kN	Footways, pedestrian areas and similar areas, passenger car parks or car parking decks.
D 400	400 kN	Carriageways of roads, parking areas and similar hard shoulders (e.g., rest areas).

Recommended retail price. Actual design may differ.
Actual dimensions may differ within the scope of production tolerances.

Standards for drainage products

DIN EN 124	Gully tops and manhole tops for vehicular and pedestrian areas
DIN 1185	Control of sub-surface water management by draining with pipes, open-ditch drainage and amelioration of the subsoil
DIN 1187	Unplasticized polyvinyl chloride (PVC-U) drainpipes; dimensions, requirements, testing
DIN EN 1610	Construction and testing of drains and sewers
DIN EN 681-1	Material requirements for pipe joint seals used in water and drainage applications
DIN 4095	Planning, design and installation of drainage systems protecting structures against water in the ground
DIN 4261	Small sewage treatment plants – Part 5: Infiltration of aerobic biologically treated domestic wastewater
DIN 4262	Pipes and fittings for subsoil drainage of traffic areas and underground engineering – Part 1: Pipes, fittings and their joints made from PVC-U, PP and PE
DIN EN 61386-24	Particular requirements – Conduit systems buried underground
DIN 8061 supplementary sheet 1	Unplasticized polyvinyl chloride pipes – chemical resistance of pipes and fittings of PVC-U
DIN 8075 supplementary sheet 1	High-density polyethylene (PE) pipes – chemical resistance of pipes and fittings
DIN 8078 supplementary sheet 1	Polypropylene (PP) pipes – chemical resistance of pipes and fittings
DIN EN ISO 10320	Geotextiles and geotextile-related products – Identification on site
DIN EN 13252	Geotextiles and geotextile-related products
DIN 13476-3	Plastic piping systems for non-pressure underground drainage and sewerage – Part 3: Specifications for pipes and fittings with smooth internal and profiled external surface and for the piping system, Type B
DIN 16961	Thermoplastics pipes and fittings with profiled wall and smooth pipe inside
DIN 18035	Part 3: Sports grounds – drainage
DIN 18195	Waterproofing of buildings
DIN 18300	German construction contract procedures (VOB) Part C – Earthworks
DIN 18308	German construction contract procedures (VOB) Part C – Land drainage and infiltration management works
DIN EN 18533	Waterproofing of elements in contact with soil
DWA-A 102-2/BWK-A 3-2	Principles of management and treatment of stormwater runoff for the discharge into surface waterbodies; Part 2: Emission-related evaluations and regulations
ATV-DVWK-A 110	Directives for hydraulic dimensioning and performance verification of sewers and drains
ATV-DVWK-A 127	Directives for the static calculation of sewers and drain pipes
DWA-A 138	Planning, construction and operation of facilities for the percolation of precipitation water
DWA-A 139	Construction and testing of drains and sewers
DWA-M 153	Recommendations for handling stormwater
A515/A535	KRV installation manual
REwS	Directives relating to road drainage
RiStWag	Directive for construction works on roads in catchment areas
ZTV E-StB 09	Supplementary technical terms and conditions of contract and guidelines for earthworks in road construction
ZTVT-StB 86	Supplementary technical requirements for base layers in road construction
ZTVA-StB 97/06	Supplementary technical terms and conditions of contract and guidelines for earthworks in traffic areas
ZTV Ew-StB 14	Supplementary technical terms and conditions of contract and guidelines for the construction of drains in road construction
LB StB By	Specification of services for road and bridge construction in Bavaria
STLK 110	Standard service catalogue for road and bridge construction; service type: road drainage
StLB 009	Standard services book sewer drainage
StLB 010	Standard services book drainage
TL Geotex E-StB 95	Technical delivery conditions for geotextiles and geogrids for earthworks in road construction
RStO 12	Directive for the standardisation of superstructures in traffic areas
EN 17152	Plastics piping systems for non-pressure underground conveyance and storage of non-potable water – Boxes used for infiltration, attenuation and storage systems
EN 17151	Plastics piping systems for non-pressure underground conveyance and storage of non-potable water – Test method for determination of long-term compression strength of boxes
EN 17150	Plastics piping systems for non-pressure underground conveyance and storage of non-potable water – Test method for determination of short-term compression strength of boxes
DWA-A 117	Dimensioning of stormwater holding facilities
DIN 14230	Underground water tank
DIN 1989-100	Rainwater harvesting systems – Part 100: Specifications in relation to DIN EN 16941-1
DIN EN 16941-1	On-site non-potable water systems – Part 1: Systems for the use of rainwater

Recommended retail price. Actual design may differ.
Actual dimensions may differ within the scope of production tolerances.

Technical data – materials

Chemical characteristics

			Polyolefins	
Fluid Medium	**Percentage Concentration**	**PVC-U (polyvinyl chloride) DIN 8061 supplementary sheet 1**	**PE (polyethylene) DIN 8075 supplementary sheet 1**	**PP (polypropylene) DIN 8078 supplementary sheet 1**
Sulphuric and hydrochloric acid emissions	each	+	+	+
Formic acid	TR	+	+	+
Fluid ammonia	TR	o	+	+
Gaseous ammonia	TR	+	+	+
Aniline	TR	–	+	+
Gasoline	H	+	+	o
Benzene	TR	–	o	o
Beer	H	–	+	+
Borax (disodium tetraborate)	GL	+	+	+
Boracic acid	GL	+	+	+
Calcium chloride	GL	+	+	+
Gaseous, dry chlorine	TR	o	+	-
Chlorine water	GL	o	o	o
Diesel fuel	H	+	+	+
Fertiliser salts	GL	+	+	+
Ethylene glycol	TR	+	+	+
Fatty acids	TR	+	+	+
Fluoric acid (hydrogen fluoride solution)	40 %	+	+	+
Photo developing baths	H	+	+	+
Fruit juices and fruit drinks	H	+	+	+
Glycerine (glycerol)	TR	+	+	+
Aqueous urea	33 %	+	+	+
Potash lye (potassium hydroxide solution)	60 %	+	+	+
Silicic acid	each	+	+	+
Hexafluorosilicic acid	32 %	+	+	+
Sodium chloride	GL	+	+	+
Carbonic acid (carbon dioxide)	GL	+	+	+
Lactic acid	90 %	+	+	+
Mineral oils (free from aromatic compounds)	H	+	+	+
Soda lye (sodium hydroxide solution)	60 %	+	+	+
Oils and fats, vegetable and animal	H	+	+	+
Paraffin	TR	+	+	+
Nitric acid	25 %	+	+	o
Hydrochloric acid	30 %	+	+	+
Sulphuric acid	80 %	+	+	+
Saltwater (seawater)	H	+	+	+
Sebum (oils and fats)	H	+	+	+
Turpentine oil	TR	+	o	o
Urine	H	+	+	+
Detergent	VL	no information available	+	+
Water (wastewater with traces of phenol/butanol)	H	+	+	+
Gaseous hydrogen	TR	+	+	+
Tartaric acid	GL	+	+	+
Zinc chloride	GL	+	+	+
Zinc sulphate	GL	+	+	+
Citric acid	GL	+	+	+

Note: The information provided above applies to 20 °C. For special applications, the concentration (%) and the temperature must always be indicated in addition to the fluids.

+ = resistant
o = partly resistant
– = non-resistant

VL = aqueous solution, rate ≥ 10 %
GL = saturated solution, aqueous
TR = minimum requirement: technically pure
H = standard composition

Delivery service

The availability of raw materials, goods and transport services can vary depending on the market situation. The following information represents the standard values typical of the usual availability of goods and services. We therefore do not assume any responsibility for the accuracy of the information provided.

Shipping and delivery dates depend on availability, but we try to keep them as short as possible!

Full load shipments	usually delivered within **2–4 business days**
Partial load shipments	usually delivered within**5–10 business days**

Recommended retail price

All prices are in EURO, **excluding VAT**.
This price list replaces all previous price lists. Please ask for individual offers.

Our General Terms and Conditions including the basic and extended retention of title clauses apply. You may request a copy of these terms or review or download them from our website at **www.fraenkische.com**.

General information on using our products and systems:
Information about or assessments of the use and installation of our products and systems is exclusively provided on the basis of the information submitted. We do not assume any liability for damage caused by incomplete information. If the actual situation deviates from the planned situation or if a new situation occurs or if different or new installation techniques are applied, these must be agreed upon with FRÄNKISCHE, since these situations or techniques may lead to different conclusions. Notwithstanding the above, the customer is solely responsible for verifying the suitability of our products and systems for the intended purpose. In addition, we do not assume any liability or responsibility for system characteristics and system functionalities when third-party products or accessories are used in combination with FRÄNKISCHE systems. We only assume liability if original FRÄNKISCHE products are used. For use in other countries than Germany, country-specific standards and regulations must also be observed.
All information in this publication generally reflects the state of the art at the time of printing. Furthermore, considerable care was taken when preparing this publication. However, we cannot rule out printing errors or translation mistakes. Furthermore, we reserve the right to change products, specifications and other information, or changes may be necessary due to legal, material or other technical requirements, which no longer could be considered for this publication. For this reason, we are unable to accept any liability if this is based solely on the information contained in this publication. Instrumental in connection with information about products or services are always the purchase order, the concrete product purchased and the related documentation or the information provided by our specialist staff in the specific case.

FRÄNKISCHE

FRÄNKISCHE Rohrwerke Gebr. Kirchner GmbH & Co. KG | Hellinger Str. 1 | 97486 Königsberg/Germany
Phone +49 9525 88-0 | Fax +49 9525 88-2413 | marketing@fraenkische.de | www.fraenkische.com

EN.90035/8.05.24 | Subject to change without notice | Cat. no. 5000-0673-00X | 05/2024 [DE.90034/6.05.24]